WSM PERFORMANCE PARTS

PRECISION MARINE TOOLS

PROTORQUE PREMIUM MARINE ELECTRICAL PRODUCTS

2016 MARINE DISTRIBUTOR

Parts & Tools

- Universal
- I / O
- Chrysler / Force
- Honda
- Johnson / Evinrude
- Mercury
- Nissan / Tohatsu
- Suzuki
- Yamaha
- Tools

Arizona 1-800-977-1414

Florida 1-866-417-4072

New York 1-800-222-3375

Puerto Rico 787-832-2499

www.wsmparts.com

Oetiker Clamp Kit

990-500

990-505

990-115

PART NO.		DESCRIPTION
990-500		Comes with Pliers and Assortment of Clamps
		Contains 010.3mm to 031.6mm Clamps
990-505		Assortment of Clamps
		Contains 006.0mm Clamps to 012.3mm Clamps
990-115	787145	Replacement Pliers for Oetiker Clamps

Replacement Oetiker Clamps

Sold in 10 Packs

Part No.	Standard Size	Metric Size
Band Width		**5 x 0.5mm**
13-162-16	0.209-0.256"	005.3mm-006.5mm
13-162-18	0.228-0.276"	006.0mm-007.0mm
13-162-20	0.268-0.315"	006.8mm-008.0mm
13-162-22	0.276-0.343"	007.0mm-008.7mm
13-162-24	0.307-0.374"	007.8mm-009.5mm
13-162-25	0.327-0.394"	008.3mm-010.0mm
13-162-26	0.347-0.413"	008.8mm-010.5mm
13-162-27	0.362-0.429"	009.2mm-010.9mm
13-162-28	0.378-0.445"	009.6mm-011.3mm
13-162-29	0.398-0.465"	010.1mm-011.8mm
Band Width		**7 x 0.6mm**
13-162-30	0.386-0.484"	009.8mm-012.3mm
13-162-31	0.406-0.504"	010.3mm-012.8mm
13-162-32	0.425-0.524"	010.8mm-013.3mm
13-162-34	0.445-0.543"	011.3mm-013.8mm
13-162-35	0.453-0.551"	011.5mm-014.0mm
13-162-36	0.472-0.571"	012.0mm-014.5mm
13-162-38	0.504-0.602"	012.8mm-015.3mm
13-162-40	0.520-0.618"	013.2mm-015.7mm
13-162-42	0.539-0.638"	013.7mm-016.2mm
13-162-44	0.571-0.669"	014.5mm-017.0mm
13-162-46	0.602-0.728"	015.3mm-018.5mm
13-162-48	0.654-0.780"	016.6mm-019.8mm
13-162-52	0.701-0.827"	017.8mm-021.0mm
13-162-56	0.764-0.890"	019.4mm-022.6mm
13-162-60	0.823-0.949"	020.9mm-024.1mm
13-162-64	0.882-1.008"	022.4mm-025.6mm
13-162-68	01.3/16"	030.1mm
13-162-72	01.1/4"	031.6mm
13-162-76	01.5/8"	041.0mm

New York • 1-800-222-3375
631-244-8060 • fax 631-244-0556
61 Floyd Run, Bohemia, NY 11716
Puerto Rico
787-832-2499 • fax 787-832-2939
234 Balboa St., Mayaquez, Puerto Rico 00681-2605
e-mail: info@wsmparts.com • www.wsmparts.com

Clamps

WSM Hose Clamps

Stainless Steel
sold each

Part No.	Description	Width
13-161	1/4"-5/8"	1/4"
13-161-01	5/16"-7/8"	1/4"
13-161-03	1/2"-1"	1/4"
13-161-05	3/4"-1 3/4"	1/4"
13-161-04	13/16"-1 1/2"	1/4"
13-161-02	1 1/4"-2"	1/4"

Universal Fuel Pump

Fuel Pump
Part No. 600-101
Free Flow Rate : 72 gph
Maximum pressure (psi) 6 psi
12 Volt Marine Systems

For application Specific Fuel pumps see corresponding sections.

Drain Plug Gasket Kits

Part No.	Description	O.E. No.
555-01K	Drain Plug Gasket Assortment Kit Fits: Mercury, J/E, Yamaha, Suzuki, Nissan/Tohatsu	

Note: Kits Included 50 Pieces Of Each Gasket In Kit

Drain Plug Replacement Gaskets

Sold in packs of 50 Pieces

Part No.	Description	O.E. No.
555-11	Johnson Evinrude/Mercury	12-19183 / 307552
555-15	Johnson / Evinrude	311598
555-13	Nissan / Tohstsu	332600060M
555-14	Suzuki	09168-10022
555-12	Volvo	
555-10	Yamaha	90430-08020-00

PRECISION
Arizona • 1-800-977-1414
480-966-1550 • fax 480-966-1565
16441 N. 91St. Suite 105 Scottsdale, AZ 85260
Florida • 1-866-417-4072
941-238-0960 • fax 941-238-0965
1899 60th Place East, Bradenton, FL 34203
e-mail: info@wsmparts.com • www.wsmparts.com

Fuel Water Separators

WSM Fuel Water Separators

Johnson / Evinrude / OMC / Volvo / Cobra EFI Small Hole

3 1/2" H X 3 1/8" W
10 MICRON (FOR USE WITH FUEL INJECTED ENGINES)

Part No.	Description	Brand	OEM No.	Volvo No.
600-446	Filter Only	WSM	502906	3851218-2

Johnson / Evinrude & OMC I/O Big Hole Style

4 1/8" H X 3 3/4" W
10 Micron (For use with Fuel Injected Engines)

Part No.	Description	Brand	OEM No.
600-444	Filter Only	WSM	502905

Racor Drain Bowl Style (Big Hole)

Filter only 4 1/8" H X 3 3/4" W
10 Micron (For use with Fuel Injected Engines)
O-Ring Included

Bowl Sold Separately
600-418

Part No.	Racor No.	Honda No.	Mercury No.	Suzuki	Brand
600-454	S3227	17670-ZW1-801AH	35-886638	99105-20005	WSM

Mercury EFI Replacement Filters w/ Sensor

3 1/2" H X 3 1/8" W
10 Micron (For use with Fuel Injected Engines)

Part No.	Description	Fits	Brand	O.E.No.
600-448	Filter & Sensor	95 & Earlier	WSM 31-18458Q3 31-18458A3	35-18458T3
600-450	Filter & Sensor	96 & Later	WSM 35-18458Q4 35-18458A4	184585

New York • 1-800-222-3375
631-244-8060 • fax 631-244-0556
61 Floyd Run, Bohemia, NY 11716
Puerto Rico
787-832-2499 • fax 787-832-2939
234 Balboa St., Mayaquez, Puerto Rico 00681-2605
e-mail: info@wsmparts.com • www.wsmparts.com

Fuel Water Separators

Mercury / Yamaha Style Small Hole

3 7/8" H X 3 3/4"W Filter Kit Includes:
Aluminum Bracket & Filter
21 Micron (For use with Carburated Engines)

Part No.	Description	Brand	NPT
600-441K	Kit Filter w/ Aluminum Bracket	WSM	1/4"
600-441	Filter Only	WSM	

10 Micron (For use with Fuel Injected Engines)

600-440K	Kit Filter w/ Aluminum Bracket	WSM	1/4"
600-440	Filter Only	WSM	

Mercury / Yamaha Style Small Hole

4 1/8" H X 3 3/4" W/Filter Kit Includes: Aluminum Bracket & Filter
21 Micron (For use with Carburated Engines)

Part No.	Description	Brand	NPT
600-443K	Kit Filter w/ Aluminum Bracket	WSM	1/4"
600-443-01K	Kit Filter w/ Aluminum Bracket	WSM	3/8"
600-443	Filter Only	WSM	

10 Micron (For use with Fuel Injected Engines)

600-442K	Kit Filter w/ Aluminum Bracket	WSM	1/4"
600-442-01K	Kit Filter w/ Aluminum Bracket	WSM	3/8"
600-442	Filter Only	WSM	

Mercury / Yamaha / Racor (Small Hole) Clear Plastic Drain Bowl Style

4 1/8" H X 3 3/4" W

10 MICRON (FOR USE WITH FUEL INJECTED ENGINES)

Part No.	Description	Brand	NPT
600-456K	Kit Filter w/ Aluminum Bracket & Clear Bowl	WSM	1/4"
600-456-01K	Kit Filter w/ Aluminum Bracket & Clear Bowl	WSM	3/8"
600-456	Filter Only S3213 & S3220UL	WSM	

PRECISION
Arizona • 1-800-977-1414
480-966-1550 • fax 480-966-1565
16441 N. 91St. Suite 105 Scottsdale, AZ 85260
Florida • 1-866-417-4072
941-238-0960 • fax 941-238-0965
1899 60th Place East, Bradenton, FL 34203
e-mail: info@wsmparts.com • www.wsmparts.com

Fuel Water Separators

Racor Style Drain Bowls

10 Micron (For use with Fuel Injected Engines)

Part No.	Description	Brand
600-418	Clear Bowl Only	WSM

Yamaha High-Capacity Fuel Water Separator

6 1/8" H X 3 3/4" W Filter Kit Includes: Aluminum Bracket & Filter

10 Micron (For use with Fuel Injected Engines)

Part No.	Description	Brand	NPT
600-452K	Kit Filter w/ Aluminum Bracket	WSM	1/4"
600-452-01K	Kit Filter w/ Aluminum Bracket	WSM	3/8"

Part No.	Description	Brand	OEM No.
600-452	Filter Only	WSM	MAR-FUELF-IL-TR

Yamaha Style Mini Kit Small Hole

4 1/8" H X 3 1/8" W

10 Micron (For use with Fuel Injected Engines)

Part No.	Description	Brand	OEM No.
600-453	Filter Only	WSM	MAR-MINIF-IL-TR

Replacement Brackets

Part No.	Description	Brand	NPT
600-426	Aluminum Bracket	WSM	1/4"
600-428	Aluminum Bracket	WSM	3/8"

New York • 1-800-222-3375
631-244-8060 • fax 631-244-0556
61 Floyd Run, Bohemia, NY 11716
Puerto Rico
787-832-2499 • fax 787-832-2939
234 Balboa St., Mayaquez, Puerto Rico 00681-2605
e-mail: info@wsmparts.com • www.wsmparts.com

Water Pump Impellers And Kits

Mercruiser Water Pump Impeller
Part No. 700-205
Fits: Alpha 1 - Generation 2
Units thru S/N OD494568
O.E. No. 47-89984

Mercruiser Water Pump Kit with Out Base Or Housing
Part No. 725-157
Fits:Alpha 1 - Generation 2
Units thru S/N OD494568
O.E. No. N/A

Mercruiser Water Pump Kit with Upper Housing
Part No. 750-157
Fits: Alpha 1 - Generation 2
Units thru S/N OD494568
O.E. No. 46-96148A5

Mercruiser Water Pump Impeller
Part No. 700-155
Fits: Alpha 1 - Generation 2
S/N OD494569 & Above
O.E. No. 47-43026-1

Mercruiser Water Pump Kit With Out Base Or Housing
Part No. 725-155
Fits: Alpha 1 - Generation 2
S/N OD494569 & Above
O.E. No. 47-43026T6

Mercruiser Water Pump Impeller
Part No. 700-605
Fits: Bravo with D Shaft Water Pump
O.E. No. 47-59362

OMC Water Pump Impeller
Part No. 700-610
Fits: OMC Stringer Mount
O.E. No. 379475

Volvo Water Pump Impeller
Part No. 700-600
Fits: Late model Bravo's & High Performance
Impeller fits double flat shaft's
O.E. No. 47-862232A2

PRECISION
Arizona • 1-800-977-1414
480-966-1550 • fax 480-966-1565
16441 N. 91St. Suite 105 Scottsdale, AZ 85260
Florida • 1-866-417-4072
941-238-0960 • fax 941-238-0965
1899 60th Place East, Bradenton, FL 34203
e-mail: info@wsmparts.com • www.wsmparts.com

Water Pumps

Ford Small Block
Part No. PH600-0006
O.E. No. 71683A1, 982517

GM 2.5-3.0L 4 Cylinder
Part No. PH600-0004
O.E. No. 65142A1, 984360

GM Small Block
Part No. PH600-0005
O.E. No. 811841

GM Big Block
Part No. PH600-0002
O.E. No. 811573, 9874487, 3855991

Mercruiser 4.3 L 2007-Up
Part No. PH600-0007
O.E. No. 46-879194401

Fuel Pumps Chrysler

Chrysler Fuel Pump
Flange I.D #40781, M6866
O.E No.2279913, 1736073
Fits: V8 273,318,340,360
WSM Part No. 600-161

New York • 1-800-222-3375
631-244-8060 • fax 631-244-0556
61 Floyd Run, Bohemia, NY 11716
Puerto Rico
787-832-2499 • fax 787-832-2939
234 Balboa St., Mayaquez, Puerto Rico 00681-2605
e-mail: info@wsmparts.com • www.wsmparts.com

Fuel Pumps Mercruiser

Mercruiser Fuel Pump
Flange I.D. #60601
O.E. No. 812454A1, 862048A1
Fits: 120, 140, 3.0L, 224 C.I.
7.4L, 454, 420, 330
WSM Part No. 600-128

Mercruiser V-8 Fuel Pump
Flange I.D. #M60600
O.E. No. 861678A1, 97401A2,
97401A2A8
Fits: GM 305, 350, 228, 230,
260, 898
WSM Part No. 600-132

Mercruiser Fuel Pump
Flange I.D. #M60032
Merc O.E. No. 86234A4, 86234A05
OMC O.E. No. 985602, 985603, 982240
Fits: GM 153, 181, 225, 250, 120, 140,
160, 165, 470, 486, 488
WSM Part No. 600-171

Mercruiser 4 & 6 Cylinder Fuel Pump
Flange I.D. #6790, M3530,
O.E. No. 32722
Fits: GM 153, 230, 250, 292
WSM Part No. 600-139

Mercruiser Fuel Pump
Flange I.D. #M60315
O.E. No. 41141A2, 862077A1, 509408
Fits: GM 231, 262, 229
WSM Part No. 600-175

Mercruiser V-8 Fuel Pump
Flange I.D. #41413, M6696
Fits: Ford 302, 351
WSM Part No. 600-163

Mercruiser V-8 Fuel Pump
O.E. No. 861677T
Fits: 454 & 502
WSM Part No. 600-129

Fuel Pumps OMC / VOLVO

OMC Fuel Pump
Flange I.D #60201
O.E No. 982997
Fits: GM V6 262 4.3 Liter
WSM Part No. 600-177

OMC Fuel Pump
Flange I.D. #M60032
O.E. No. 985602, 985603, 982240
Fits: GM 153, 181, 225, 250, 120,
140, 160, 165, 470, 486, 488
WSM Part No. 600-171

OMC Cobra V-6 Fuel Pump
Flange I.D. #40001, M3642
O.E. No. 380986
Fits: GM 225, PB-V215
WSM Part No. 600-141

PRECISION
Arizona • 1-800-977-1414
480-966-1550 • fax 480-966-1565
16441 N. 91St. Suite 105 Scottsdale, AZ 85260
Florida • 1-866-417-4072
941-238-0960 • fax 941-238-0965
1899 60th Place East, Bradenton, FL 34203
e-mail: info@wsmparts.com • www.wsmparts.com

Electric Mercruiser Fuel Pumps

Universal Electric Fuel Pump
12V 72 GPH @ 5.75 PSI
1/4" NPSS for 3/8" hose
For use with gasoline and diesel fuel
WSM Part No. 600-101

Mercruiser Electric Fuel Pump
O.E. No. 805656A2
Fits: 1992-93, 1996 F.I & Carbureted 4.3 Liter
WSM Part No. 600-123

Mercruiser Electric Non-Threaded
O.E. No. 861156A1
Fits: 305, 350, 377, 454, 502, 4.3L
WSM Part No. 600-126

Mercruiser V-8 Electric, Low Pressure Threaded
O.E. No. 861155A3
Fits: 5.0L / 5.7L
Part No. 600-124

Mercruiser V-8 350
O.E. No.827682
Fits: 1994-1996
Part No. 600-110

Electric OMC / Volvo Fuel Pumps

Volvo
O.E. No. 3854280, 3857650, 3855958, 987620, 988037
Fits: 1996-1998 4.7L, 1997-1998 5.7 L, 1996-1998 8.2L
WSM Part No. 600-138

Volvo
O.E. No. 3857985, 3850810, 3858715
Fits: 1992-1994 7.4L & 8.2L
WSM Part No. 600-137

OMC Pump
O.E. No. 3858261
WSM Part No. 600-133

New York • 1-800-222-3375
631-244-8060 • fax 631-244-0556
61 Floyd Run, Bohemia, NY 11716
Puerto Rico
787-832-2499 • fax 787-832-2939
234 Balboa St., Mayaquez, Puerto Rico 00681-2605
e-mail: info@wsmparts.com • www.wsmparts.com

Mercruiser Fuel Pump Application Chart

Model	CID / # CYL	Year Range	Serial	Serial	WSM	Notes
120	153/L4	1964-1972	1666601	3377340	**600-139**	
120	153/L4	1972-1982	3377341	6229717	**600-171**	
120	153/L4	1964-1972	1666601	3377340	**600-171**	6
120	153/L4	1983-1986	6229718	B531853	**600-171**	3
120			4469866	& Below	**600-171**	
120			4469866	4952700	**600-171**	
120			4952701	& Up	**600-171**	
120			5192049	6229717	**600-171**	
140			4460664	& Below	**600-171**	
140			4460665	4918569	**600-171**	
140			4918570	& Up	**600-171**	
150	230/L6	1964-1966	1666495	2048046	**600-139**	
150			1666495	2048046	**600-139**	
160	250/L6	1967-1969	2048022	2770031	**600-139**	
160	250/L6	1967-1969	2048022	2770031	**600-171**	
160			2048022	2770031	**600-171**	
165			4471566	4884834	**600-171**	
165			5178959 & Up	& Up	**600-171**	
175	262/V-6	1987	B527955	B773242	**600-175**	
205	262/V-6	1985-1987	A331455	B775129	**600-175**	
228	305/V-8	1982-1984	6218462	6899268	**600-132**	
230	305/V-8	1985-1987	6899269	B773739	**600-132**	
260	350/V-8	1983-1987	6218461	& Up	**600-132**	
260	350/V-8	1978-1982	4908850	6218461	**600-132**	9
420	454/V-8	1987-1989	A398941	B622418	**600-128**	
425	454/V-8	1990-1992	B622419	D725499	**600-128**	
450	454/V-8	1995-1996	F347100	F347277	**600-129**	
470	224/L4	1976-1984	4208730	6916778	**600-171**	
470			5097479	& Below	**600-171**	
470			5097480	& Up	**600-171**	
470			5520115	6218036	**600-171**	
470			6218037	& Up	**600-171**	
485	224/L4	1980-1982	5685394	6218036	**600-171**	
485			5685394	& Up	**600-171**	
488	224/L4	1983-1984	6170297	6916778	**600-171**	3
488			6170297	& Up	**600-171**	
898	305/V-8	1983-1984	6218462	6899057	**600-132**	
898	305/V-8	1977-1982	4762210	6218461	**600-132**	9
120/2.5L			6229718	& Up	**600-171**	
140 (4 CYL)181/L4		1968-1982	2508261	6229717	**600-171**	
140 (4 CYL)181/L4		1983-1986	6229718	B450800	**600-171**	
140 (6 CYL)194/L6		1963	1538930	1725960	**600-139**	
140 (4 Cyl.)			5157669	6229717	**600-171**	
140 (6 Cyl.)			1538930	1725960	**600-139**	
140/3.0L			6229717	& Below	**600-171**	
165 (6 CYL)	250/L6	1979-1981	2770032	5813433	**600-171**	
175/4.3L (262 CID)			B527955	& Up	**600-175**	
185 (2bbl)	262/V-6	1985-1986	A331455	B527954	**600-175**	
185 (4bbl)	229/V-6	1983-1984	6330183	6919655	**600-175**	
185 (229 CID)			6330183	& Up	**600-175**	
185 (262 CID)			A331455	& Up	**600-175**	
200 GM			6218462	& Up	**600-132**	
200/5.0L GM			B525982	& Up	**600-132**	
228 MCM & MIE	305/V-8	1979-1982	5170009	6218461	**600-132**	9
230 MIE	305/V-8	1981-1987	5907058	B788151	**600-132**	
230 GM			6218462	& Up	**600-132**	
230/5.0L-GM (IB)			B522506	& Up	**600-132**	
230/5.0L-LX GM			B525982	& Up	**600-132**	
260 MIE	350/V-8	1981-1987	5907058	B788151	**600-132**	

1	Low pressure lift pump	6	Carter fuel pump
2	High pressure fuel cool pump	7	Mechanical fuel pump
3	Fuel pump mounted with filter bowl facing up	8	Use if fuel pump has sight glass
4	Fuel pump mounted with filter bowl facing down	9	Use if fuel pump had sight tube
5	AC fuel pump	10	Fuel pump/cooler kit

PRECISION
Arizona • 1-800-977-1414
480-966-1550 • fax 480-966-1565
16441 N. 91St. Suite 105 Scottsdale, AZ 85260
Florida • 1-866-417-4072
941-238-0960 • fax 941-238-0965
1899 60th Place East, Bradenton, FL 34203
e-mail: info@wsmparts.com • www.wsmparts.com

Mercruiser Fuel Pump Application Chart

Continued

Model	CID / # CYL	Year Range	Serial	Serial	WSM	Notes
260 GM Inboard			5907058	& Up	**600-132**	
260/5.7 GM			B525982	& Up	**600-132**	
260/5.7L GM (IB)			5907058	& Up	**600-132**	
3.0L	181/L4	1987-1989	B450801	C856558	**600-178**	3
300MR/TRS GM	350/V-8	1985-1986	6668677	B430367	**600-132**	
330 WITH B/W	454/V-8	1982-1987	6083145	B816540	**600-128**	
330 GM/W.B.W.			6083145	& Up	**600-128**	
340 MIE	454/V-8	1981-1987	5889914	B788365	**600-128**	
340/7.4L-GM (IB)			5889914	& Up	**600-128**	
350 MAG MPI SKI	350/V-8	1995-1996	F350583	F799999	**600-132**	
350 MAG SKI	350/V-8	1991-1997	D505450	K999999	**600-132**	
350 MAG ALPHA EFI (GEN +)	350/V-8	1996	F800300	K001508	**600-132**	
350 MAG BRAVO MPI	350/V-8	1995-1996	F415189	K001500	**600-132**	
370 TRS	454/V-8	1978-1987	4179554	B714586	**600-128**	
370 TRS-GM			6721528	& Up	**600-128**	
4.3L	262/V-6	1988-1992	B773243	D714106	**600-175**	
4.3LX	262/V-6	1988-1992	B775130	D714369	**600-175**	
400 TRS	454/V-8	1980-1986	4179554	B457644	**600-128**	
425 (GEN V)	454/V-8	1992-1993	D763855	D937011	**600-129**	
425-GM			A398941	& Up	**600-128**	
440 TRS	454/V-8	1983-1986	4179554	B485220	**600-128**	
454 MAG ALPHA	454/V-8	1986-1988	A631894	B785148	**600-128**	
454 MAG BRAVO	454/V-8	1988-1992	A631894	B785148	**600-128**	
454 MAG BRAVO	454/V-8	1992-1997	D805069	K999999	**600-129**	
454 MAG EFI	454/V-8	1994-1996	F115700	F802349	**600-129**	
454 MAG EFI SKI	454/V-8	1995-1996	F215800	F820099	**600-129**	
454 MAG MPI	454/V-8	1996	F802350	K147349	**600-129**	
454 MAG MPI SKI	454/V-8	1996-1997	F820100	K999999	**600-129**	
454 MAG. BRAVO GM			B840126	& Up	**600-128**	
5.0L	305/V-8	1988-1995	B774445	F600999	**600-132**	
5.0L MIE	305/V-8	1988	B788152	C396832	**600-132**	
5.0LX	305/V-8	1988-1995	B773740	F600999	**600-132**	
5.7 GM (SKI)			B514627	& Up	**600-132**	
5.7L	350/V-8	1988-1997	B773305	K999999	**600-132**	
5.7L EFI	350/V-8	1995-1996	F225560	K001505	**600-132**	
5.7L MIE	350/V-8	1988-1997	B788152	K999999	**600-132**	
5.7L SKI	350/V-8	1985-1997	A338553	K999999	**600-132**	
5.7L BRAVO (GM)	350		B525982	& Up	**600-132**	
5.7L-GM			F025000	& Up	**600-132**	
5.7LX	350/V-8	1996-1997	F601000	K999999	**600-132**	
5.7LX BRAVO EFI (GEN +)	350/V-8	1996	F800300	K001508	**600-132**	
5.7LX EFI	350/V-8	1996	F752400	K001505	**600-132**	
502 MAG BRAVO	502/V-8	1992-1993	D824589	F114528	**600-129**	
502 MAG EFI	502/V-8	1993-1995	D840650	F802599	**600-129**	
502 MAG MPI	502/V-8	1996	F802600	K147349	**600-129**	
525SC	454/V-8	1992-1999	D725809	L415623	**600-129**	
600SC	502/V-8	1992-2000	D725676	L601186	**600-129**	
7.4L BRAVO	454/V-8	1988-1991	B771113	D603117	**600-128**	
7.4L BRAVO	454/V-8	1992-1997	D603118	K999999	**600-129**	
7.4L MIE	454/V-8	1988-1992	B788366	D715493	**600-128**	
7.4L MIE	454/V-8	1992-1997	D715494	K999999	**600-129**	
7.4L MPI MIE	454/V-8	1995-1997	F563052	K147349	**600-129**	
7.4L W/HURTH (IB)			C391564	& Up	**600-128**	
7.4LX BRAVO MPI	454/V-8	1996-1997	F602010	K999999	**600-129**	
8.2L MIE	502/V-8	1993-1996	D857200	F819619	**600-129**	
8.2L MPI MIE	502/V-8	1996-1997	F819620	K147349	**600-129**	

1	Low pressure lift pump	6	Carter fuel pump
2	High pressure fuel cool pump	7	Mechanical fuel pump
3	Fuel pump mounted with filter bowl facing up	8	Use if fuel pump has sight glass
4	Fuel pump mounted with filter bowl facing down	9	Use if fuel pump had sight tube
5	AC fuel pump	10	Fuel pump/cooler kit

New York • 1-800-222-3375
631-244-8060 • fax 631-244-0556
61 Floyd Run, Bohemia, NY 11716

Puerto Rico
787-832-2499 • fax 787-832-2939
234 Balboa St., Mayaquez, Puerto Rico 00681-2605

e-mail: info@wsmparts.com • www.wsmparts.com

OMC / Volvo Application Chart

Model	Years	WSM
2.5	1982-85	**600-171**
100	1972-73	**600-171**
110	1964	**600-171**
120	1965-80	**600-171**
140	1973-81	**600-171**
140 Jet Drive	1973	**600-171**
150	1964	**600-141**
150 Model HU-13EM	1965	**600-141**
150 Except HU-13EM	1965	**600-141**
165	1972-76	**600-171**

OMC Electric Fuel Pump

Year	Engine	Application	O.E. No.	Superseded from	WSM
1992-94	262/4.3L	Low Pressure	3858261	3850809, 3850810, 3857985	**600-133**
1997-98	350/5.7L, 454/7.4L, & 502/8.2L		Engines w/MPI - H.P.*	3857650	**600-138**
1996	454/7.4L & 502/8.2L	Engines w/MPI - H.P.*	3857650		**600-138**
1993-94	4.3L thru 5.8L	Low pressure electric fuel pump	3858261	3850809	**600-133**

*H.P. = High Pressure

Volvo Electric Fuel Pump

Year	Engine	Application	O.E. No.	Superseded from	WSM
1994-99	262/4.3L (HU-WT)	High Pressure pump	3857650		**600-138**
1994-99	262/4.3L GL/GS (All)	Carbureted - Low Pressure	3858261	3850809	**600-133**
1994-99	262/4.3L GI (HU-WT)	W.Elec. Pump - Low Pressure	3858261	3850809	**600-133**
1993-99	350/5.7L, 454/7.4L, & 502/8.2L	Engines w/MPI - High Pressure	3857650		**600-138**
1996-99	454/7.4L & 502/8.2L (HU-WT)	Engines w/MPI - High Pressure	3857650		**600-138**
1994-99	5.0L thru 5.8L	Low pressure electric fuel pump	3858261	3850809	**600-133**

PRECISION
Arizona • 1-800-977-1414
480-966-1550 • fax 480-966-1565
16441 N. 91St. Suite 105 Scottsdale, AZ 85260
Florida • 1-866-417-4072
941-238-0960 • fax 941-238-0965
1899 60th Place East, Bradenton, FL 34203
e-mail: info@wsmparts.com • www.wsmparts.com

Fuel Filters

VST Fuel Filter
Part No. 600-292
O.E. No. 808504

Fuel Filter
Part No. 600-270
O.E. No. 35-892665

See Universal Section for Water Separators

Engine Oil Filters

Ford Engine (Long Filter)
Part No. 615-215
O.E. No. 1851658
35-802886Q, 502900,
YSC-16231-20-0C

GM Engine (Short Filter)
Part No. 615-210
O.E. No. 35-802886Q, 502902,
835440, YSC-10231-20-0C

Gm V6 Engine
(W/O Remote Filter)
Part No. 615-220
O.E. No. L-319, 35-883702Q,
502903, 841750

GM Engine (Long Filter)
Part No. 615-200
O.E. No. 35-16595T1,
502901

New York • 1-800-222-3375
631-244-8060 • fax 631-244-0556
61 Floyd Run, Bohemia, NY 11716
Puerto Rico
787-832-2499 • fax 787-832-2939
234 Balboa St., Mayaquez, Puerto Rico 00681-2605
e-mail: info@wsmparts.com • www.wsmparts.com

Protorque Electrical Alternators

PH300-0001 *12 Volt, 100 Amp*

Chevrolet / Caterpillar / GMC Alternator

Delco Universal Marine Diesel Alternator 27SI Type 200 Series Negative Ground with Adjustable Regulator

Pulley is Not Included

Replaces:
1100080, 1100091, 1100215, 1101287, 1105472, 1105473

PH300-0028 *12 Volt, 63 Amp*

Chrysler / Delco Aftermarket Replacement

Replaces: 3527502, 3744890, 4026084, ANE5201S, ANE5202YS ALD5006, ALE5202, ALE5202B, ALE5202Y, ALE5204 ALE5203, ALE5204S

PH300-0028-HO *12 Volt, 105 Amp*

Chrysler & Others High Output Delco Replacement

Delco Type Alternator to Replace Chrysler with Self-Exciting Regulator, 1-Wire Hook-Up, Complete with Protective Screens & Single Pulley

Replaces:
3527501, 3527502, 3744890, 4026084
ANE5201S, ANE5202YS, ALD5006
ALE5202, ALE5202B, ALE5202Y,ALE5202, ALE5204
ALE5203, ALE5204S

PH300-0003 *12 Volt, 63 Amp*

Delco 10SI Universal 1-wire Alternator

Replaces: 0R3654, 6T1396, 7132096

PH300-0003-HO *12 Volt, 105 Amp*

Delco 10SI High Output Universal

Delco 10SI Universal Alternator with Self-Exciting Regulator, 1-Wire Hook-Up, Complete with Protective Screens and Single Pulley

Replaces Motorola Units with 1" Mounting Foot and 1/2" Hole Diameter

See Also:
PH300-0004
(2-Wire Hook-Up)
PH300-0004-HO
(2-Wire Hook-Up High Output Version)

Replaces: 0R3654, 6T1396, 7132096,

PH300-0004 *12 Volt, 63 Amp*

Delco 10SI Universal 2-wire Alternator

Replaces: 0R3654, 6T1396, 7132096

PH300-0004-HO *12 Volt, 105 Amp*

Delco 10SI High Output Universal 2-wire

Delco 10SI Universal Alternator with Self-Exciting Regulator, 2-Wire Hook-Up, Complete with Protective Screens and Single Pulley

Replaces Motorola Units with 1" Mounting Foot and 1/2" Hole Diameter

See Also:
PH300-0003
(1-Wire Hook-Up)
PH300-0001-HO
(1-Wire Hook-Up High Output Version)

Replaces: 0R3654, 6T1396, 7132096

PRECISION
Arizona • 1-800-977-1414
480-966-1550 • fax 480-966-1565
16441 N. 91St. Suite 105 Scottsdale, AZ 85260
Florida • 1-866-417-4072
941-238-0960 • fax 941-238-0965
1899 60th Place East, Bradenton, FL 34203
e-mail: info@wsmparts.com • www.wsmparts.com

Protorque Electrical Alternators

PH300-0006 *24 Volt, 80 Amp*

Delco Aftermarket Replacement

Delco Universal Marine Diesel Alternator 27SI Type 200 Series Negative Ground with Adjustable Regulator

Pulley is Not Included

Replaces:
DELCO
1100077, 1100211, 1105475, R0459253

PH300-0039 *12 Volt, 95 Amp*

Delco Aftermarket Replacement

Delco Style Alternator to Replace Indmar Internal Fan wtih Self-Exciting Regulator & 65MM Serpentine Pulley

Replaces:
DELCO
8600002, S575014, 575014

PH300-0040 *12 Volt, 95 Amp*

Delco Aftermarket Replacement

Delco Style Alternator to Replace Marine Power Internal Fan with Self-Exciting Regulator & Double Pulley

PH300-0029 *12 Volt, 130 Amp*

Ford / Leece Neville Aftermarket Replacement

Leece Neville Diesel High Output Alternator 2700J Series with Adjustable Voltage Regulator

Pulley Included!

Replaces:
216040, 3604234RX, F7HT-10300-GA, F7HT-10300-HA

PH300-0044 *12 Volt, 70 Amp*

Marine Power / Delco Aftermarket Replacement

Delco Style Alternator to Replace Marine Power Internal Fan with Self-Exciting Regulator & Double Pulley

Replaces:
DELCO
19020616
MARINE POWER
4711210, 471200, 471201

PH300-0022 *12 Volt, 63 Amp*

Mercruiser / Delco Aftermarket Replacement

Replaces: 78402, 78403, 78403A1, 78403A2, 78477, 92497A3, 8MR2023F, 8MR2024F, 1102939, 1103113, 1105064

PH300-0022-CHO *12 Volt, 105 Amp*

Mercruiser / Delco Chrome High Output Replacement

Chrome High Output Delco Alternator to Replace Mercruiser with Self-Exciting Regulator, 2-Wire Hook-Up, Complete with Protective Screens & Single Pulley

Replaces:
MERCRUISER
78402, 78403, 78403A1, 78403A2, 78477, 92497A3, 8MR2023F, 8MR2024F,1102939, 1103113, 1105064

PH300-0022-HO *12 Volt, 105 Amp*

Mercruiser / Delco High Output Replacement

Delco Universal Alternator with Self-Exciting Regulator, 2-Wire Hook-Up,Complete with Protective Screens & Single Pulley

Replaces:
MERCRUISER
78402, 78403, 78403A1, 78403A2,78477,92497A3,8MR2023F 8MR2024F,1102939,1103113,1105064

New York • 1-800-222-3375
631-244-8060 • fax 631-244-0556
61 Floyd Run, Bohemia, NY 11716

Puerto Rico
787-832-2499 • fax 787-832-2939
234 Balboa St., Mayaquez, Puerto Rico 00681-2605

e-mail: info@wsmparts.com • www.wsmparts.com

Protorque Electrical Alternators

PH300-0033 *12 Volt, 70 Amp*
Mercruiser / Delco Aftermarket Replacement

Delco Style Alternator to Replace 3.0L Mercruiser 1999 & Up Internal Fan with Internal Regulator & V-Belt Pulley

Replaces:
DELCO
19020600, 19020604
MERCRUISER
862030, 862030-1, 862030T

PH300-0011 *12 Volt, 55 Amp*
Mercruiser / Mando Aftermarket Replacement

Replacement Alternator for Mercruiser 12 Volt, 55 Amp with Internal Regulator and Serpentine Pulley
See PH300-0012 for 65 Amp Version

Replaces:
MERCRUISER
807652, 807652T, AC155616

PH300-0045 *12 Volt, 63 Amp*
Mercruiser / Delco Aftermarket Replacement

Delco Style Alternator to Replace Mercruiser & Other Applications with Self-Exciting Regulator, 1-Wire Hook-Up Complete with Protective Screens & Serpentine Pulley
Will Replace PH300-0011& PH300-0012 Mando Version

Replaces:
Mercruiser
807652, 807652T, AC155616, 807653, 807653T, AC165617, M50924, M59207

PH300-0012 *12 Volt, 65 Amp*
Mercruiser / Mando Aftermarket Replacement

Replacement Alternator for Mercruiser 12 Volt, 65 Amp with Internal Regulator and Serpentine Pulley

Replaces:
MERCRUISER
807653, 807653T, AC165617, M50924, M59207

PH300-0046 *12 Volt, 63 Amp*
Mercruiser / Delco Aftermarket Replacement

Delco Style Alternator to Replace Mercruiser & Other Applications with Self-Exciting Regulator, 2-Wire Hook-Up Complete with Protective Screens & Serpentine Pulley
Will Replace PH300-0011 & PH300-0012 Mando Version

Replaces:
807652, 807652T, AC155616, 807653, 807653T, AC165617, M50924, M59207

PH300-0016 *12 Volt, 65 Amp*
Mercruiser / Mando Aftermarket Replacement

Replacement Alternator for Mercruiser with Internal Regulator & Single Pulley

Replaces:
MERCRUISER
805447T, 805884, 805884P, 805884T, AC165610, AC165616

PROTORQUE
PREMIUM MARINE ELECTRICAL PRODUCTS

PRECISION
Arizona • 1-800-977-1414
480-966-1550 • fax 480-966-1565
16441 N. 91St. Suite 105 Scottsdale, AZ 85260
Florida • 1-866-417-4072
941-238-0960 • fax 941-238-0965
1899 60th Place East, Bradenton, FL 34203
e-mail: info@wsmparts.com • www.wsmparts.com

Protorque Electrical Alternators

PH300-0013 *12 Volt, 63 Amp*

Mercruiser / OMC / Delco Aftermarket Replacement

Replaces: MERCRUISER 56045, 59755, 69529, 1100576, 1100577, 1100894, 1102393, 1102496
OMC 983424, 983836, 988257, 110577

PH300-0013-HO *12 Volt, 105 Amp*

Mercruiser / OMC / Delco High Output Replacement

Delco Universal Alternator with Self-Exciting Regulator, 1-Wire Hook-Up, Complete with Protective Screens & Single Pulley

Replaces:
MERCRUISER
56045, 59755, 69729, 1100576, 1100577, 1100894, 1102393, 1102496
OMC
983424, 983836, 988247, 1100577

PH300-0013-CHO *12 Volt, 105 Amp*

Mercruiser / OMC / Delco Chrome High Output Replacement

Chrome High Output Delco Alternator to Replace Mercruiser with Self-Exciting Regulator, 1-Wire Hook-Up, Complete with Protective Screens & Single Pulley

Replaces:
MERCRUISER
56045, 59755, 69729, 1100576, 1100577, 1100894, 1102393, 1102496
OMC
983424m 983836, 988247, 110577

PH300-0010 *12 Volt, 55 Amp*

Mercruiser / OMC / Volvo / Mando Aftermarket Replacement

Replacement Alternator for Mercruiser, Volvo and Others
12 Volt, 55 Amp with Internal Regulator and Single Pulley
See PH300-0016 for 65 Amp Version

Replaces:
MERCRUISER
12449, 19685, 78402, 78403, 78403A1, 817119, 817119-1,817119-2,817119A1, 817119A4, 92497A3, 98555, 10-358, 10-374, 8EM2007K,8EM2007KA, 8EM2010K, 8EM2010KA, A000B0331, AC1555603, AC1555604, AR150, AR150AA, AR150AR, AR150BA
OMC
3854809, 3860769
VOLVO
3850927-9, 3853853-4, 3854809-5

PH300-0034 *12 Volt, 70 Amp*

Mercury Marine / Delco Aftermarket Replacement

Delco Style Alternator to Replace 4.3L-5.7L Mercruiser 97 & Up Internal Fan with Internal Regulator & 6-Groove, 65MM Serpentine Pulley

Replaces:
DELCO
19020601, 19020609
MERCURY MARINE
862031, 862031T, 862031T1

PROTORQUE
PREMIUM MARINE ELECTRICAL PRODUCTS

New York • 1-800-222-3375
631-244-8060 • fax 631-244-0556
61 Floyd Run, Bohemia, NY 11716
Puerto Rico
787-832-2499 • fax 787-832-2939
234 Balboa St., Mayaquez, Puerto Rico 00681-2605
e-mail: info@wsmparts.com • www.wsmparts.com

Protorque Electrical Alternators

PH300-0035 *12 Volt, 70 Amp*
Mercruiser With 54Mm Pulley

Replacement Alternator for Mercruiser with 54MM Pulley

Replaces:
Mercruiser
863077T,862031T

PH300-0014 *12 Volt, 65 Amp*
OMC / Volvo / Mando Aftermarket Replacement

Replacement Alternator for Volvo Penta with Internal Regulator & Single Pulley

Replaces: OMC
3854182, 3856600, 3857561, 3860171, AC165618
VOLVO
3854182-7, 3856600-6, 3857561, 3857561-9, 3860171, AC165618

PH300-0007 *12 Volt, 63 Amp*
OMC / Prestolite / Delco Aftermarket Replacement

Delco Type Alternator to Replace Prestolite & OMC with Self-Exciting Regulator, 1-Wire Hook-Up, Complete with Protective Screens and Single Pulley

Replaces:
OMC
381166, 381519, 383433, 383443, 384233, 981186, 981187, 985964
PRESTOLITE
ALK5206, ALK6207, ALK6210, ALK6210A, ALK6222, ALK6222A, ALK6222AY, ALK6222AYS,ALK6222Y, ALK6223S

PH300-0032 *12 Volt, 70 Amp*
Pleasurecraft / Delco Aftermarket Replacement

Delco Style Alternator to Replace Indmar, Pleasurecraft, Crusader & Other Applications Internal Fan with Internal Regulator & Single Pulley

Replaces:
DELCO
19020608
PLEASURECRAFT
RA097007B, RA097007L

PH300-0038 *12 Volt, 95 Amp*
Pleasurecraft / Delco Aftermarket Replacement

Delco Style Alternator to Replace Pleasurecraft Internal Fan with Self-Exciting Regulator and 65MM Serpentine Pulley

Replaces:
PLEASURECRAFT
RA097009

PH300-0041 *12 Volt, 70 Amp*
Pleasurecraft / Delco Aftermarket Replacement

Delco Type Alternator to Replace Indmar, Pleasurecraft, Crusader & Others Internal Fan with Self-Exciting Regulator & 65MM Serpentine Pulley

Replaces:
DELCO
19020606
INDMAR
575011
PLEASURECRAFT
RA097007

PRECISION
Arizona • 1-800-977-1414
480-966-1550 • fax 480-966-1565
16441 N. 91St. Suite 105 Scottsdale, AZ 85260
Florida • 1-866-417-4072
941-238-0960 • fax 941-238-0965
1899 60th Place East, Bradenton, FL 34203
e-mail: info@wsmparts.com • www.wsmparts.com

Protorque Electrical Alternators

PH300-0042 *12 Volt, 70 Amp*

Pleasurecraft / Delco Aftermarket Replacement

Delco Style Alternator to Replace Pleasurecraft Internal Fan with Self-Exciting Regulator & 50MM Serpentine Pulley

Replaces:
DELCO
19020617
PLEASURECRAFT
RA097007A

PH300-0043 *12 Volt, 70 Amp*

Pleasurecraft / Delco Aftermarket Replacement

Delco Style Alternator to Replace Pleasurecraft Internal Fan with Self-Exciting Regulator & 65MM Serpentine Pulley

Replaces:
DELCO 8400027
PLEASURECRAFT
RA097007C

PH300-0008-D *12 Volt, 63 Amp*

Volvo / Delco Aftermarket Replacement

Replaces: 100605, 100606, 103141, A13N1M, A13N147M, A13N148M, A13N2M, A13N259,A13N259M, A13N35M, A13N57M, 3803227-2, 834625-6, 841378-3, 841380, 841762, 841763, 841765, 841766, 841766-9, 842765, 858838, 858838-6, 858839, 858839-4, 872018-7, 872926-1

PH300-0008-OE *12 Volt, 50 Amp*

Volvo OE Replacement

New Alternator for Volvo Penta and Others with Internal Regulator
Aftermarket Unit PH300-0008 Includes Pulley, OE Unit PH300-0008-OE Does Not Include Pulley!

Replaces: 100605, 100606, 103141, A13N1M, A13N147M, A13N148M, A13N2M, A13N259, A13N259M, A13N35M, A13N57M, 3803227-2, 834625-6, 841378-3, 841380, 841762, 841763, 841765, 841766, 841766-9, 842765, 858838, 858838-6, 858839, 858839-4, 872018-7, 872926-1

PH300-0027-OE *12 Volt, 60 Amp*

Volvo / Chrysler / Valeo Original Equipment Replacement

Valeo OE Alternator for Volvo Penta with Internal Regulator fits Volvo Penta EDC Diesel
Pulley not Included!

Replaces:
CHRYSLER
3527501
VOLVO
A13N234, A13N285M, 2541827, 2541451, 439067, 439185, 3803260-3, 872235-7, 873633, 873770,

New York • 1-800-222-3375
631-244-8060 • fax 631-244-0556
61 Floyd Run, Bohemia, NY 11716
Puerto Rico
787-832-2499 • fax 787-832-2939
234 Balboa St., Mayaquez, Puerto Rico 00681-2605
e-mail: info@wsmparts.com • www.wsmparts.com

Protorque Electrical Alternators

PH300-0017-DHO *12 Volt, 105 Amp*

Volvo / Delco High Output Replacement

Delco Type Alternator to Replace Volvo Penta Original Equipment Alternator with Self-Exciting Regulator, 1-Wire Hook-Up, Complete with Protective Screens & Serpentine Pulley

Replaces OE Style PH300-0017

PH300-0036 *12 Volt, 65 Amp*

Volvo Penta / Delco Aftermarket Replacement

Delco Style Alternator to Replace Volvo Penta Internal Fan with Self-Exciting Regulator & Single Pulley

Replaces:
VOLVO PENTA
3862612, 425299, A0002655299

PH300-0037 *12 Volt, 75 Amp*

Volvo Penta / Delco Aftermarket Replacement

Delco Style Alternator to Replace Volvo Penta Internal Fan with Self-Exciting Regulator & Serpentine Pulley

Replaces:
3862613, 2655391, 3884950
425392, A000265530

PH300-0015 *12 Volt, 55 Amp*

Volvo / Mando Aftermarket Replacement

Replacement Alternator for Volvo Penta with Internal Regulator & Serpentine Pulley

Replaces:
VOLVO
3857813

PH300-0017 *12 Volt, 65 Amp*

Volvo / Mando Aftermarket Replacement

Replacement Alternator for Volvo Penta – Fits GM 8.1L Vortec Engines with Internal Regulator & Serpentine Pulley

Replaces:
VOLVO
3860082, 3860798, AC165622

PH300-0023-OE *24 Volt, 45 Amp*

Volvo & Others Original Equipment Replacement

Valeo OE Alternator for Motorola and Volvo Penta with Internal Regulator, and Single Pulley Fits Volvo Penta TAMD120, TMD100, & TMD120

Replaces:
VOLVO
9AR3649G, 9AR3711G, 9AR3711G01
9AR3743G,9AR3790G, 9AR3791G
9AR3947G,510-128,510-821, 510-836
510-856,510-862,2937430

PROTORQUE
PREMIUM MARINE ELECTRICAL PRODUCTS

PRECISION
Arizona • 1-800-977-1414
480-966-1550 • fax 480-966-1565
16441 N. 91St. Suite 105 Scottsdale, AZ 85260
Florida • 1-866-417-4072
941-238-0960 • fax 941-238-0965
1899 60th Place East, Bradenton, FL 34203
e-mail: info@wsmparts.com • www.wsmparts.com

Protorque Electrical Alternators

PH300-0024-OE *12 Volt, 35 Amp*

Volvo & Others Original Equipment Replacement

Valeo OE Alternator for Motorola & Volvo Penta with Internal Regulator Fits Volvo Penta AQ120-280, AQ130-270, AQ130C-270D, AQ140A & Various Others

Pulley not Included!

Replaces:
VOLVO
9AR2775F, 9AR2775G, 9AR2775P, 510-834,2927750

PH300-0025-OE *24 Volt, 35 Amp*

Volvo & Others Original Equipment Replacement

Valeo OE Alternator for Volvo Penta and Motorola with Internal Regulator

Pulley not Included!

Replaces:
VOLVO
100879, 181990, A13N143M, A13N152M A13N36M, 2100879, 2103570, 2181990 2518064, 820652, 822454, 827303 827349, 847651, 849561,849602

PH300-0008 *12 Volt, 50 Amp*

Volvo / Valeo Aftermarket Replacement

Replaces: 100605, 100606, 103141, A13N1M, A13N147M, A13N148M, A13N2M, A13N259, A13N259M, A13N35M, A13N57M, 3803227-2, 834625-6, 84137803, 841380, 841762, 841763, 841765M 841766, 841766-9, 8427651,858838, 858838-6, 858839, 858839-4, 872018-7, 872926-1

PH300-0008-DHO *12 Volt, 105 Amp*

Volvo / Valeo High Output Delco Replacement

Replaces: 100605, 100606, 103141, A13N1M, A13N147M, A13N148M, A13N2M, A13N259, A13N259M, A13N35M, A13N57M, 3803227-2, 834625-6, 841378-3, 841380, 841762, 841763, 841765, 841766, 841766-9, 842765, 858838, 858838-6, 858839, 858839-4, 872018-7, 872926-1

Replaces:
PH300-0008
& PH300-0008-OE

PH300-0026-OE *12 Volt, 50 Amp*

Volvo / Valeo Original Equipment Replacement

Valeo OE Alternator for Volvo Penta & Universal with Internal Regulator

Pulley not Included!

Replaces:
PARIS RHONE
A13N259M
VALEO
2541663, 439181
VOLVO
872926-1, 3803227-2

PH300-0009 *12 Volt, 55 Amp*

Yamaha / Crusader / Mando Aftermarket Rep.

Replacement Alternator for Crusader & Various Other Applications with Adjustable 3 Ear Mount, Internal Regulator & Single Pulley

Replaces:
CRUSADER
39200
YAMAHA
A000B0341, TA000B0341, 19-1400-10

PROTORQUE
PREMIUM MARINE ELECTRICAL PRODUCTS

VISA MasterCard AMERICAN EXPRESS DISCOVER NOVUS
New York • 1-800-222-3375
631-244-8060 • fax 631-244-0556
61 Floyd Run, Bohemia, NY 11716
Puerto Rico
787-832-2499 • fax 787-832-2939
234 Balboa St., Mayaquez, Puerto Rico 00681-2605
e-mail: info@wsmparts.com • www.wsmparts.com
WSM PERFORMANCE PARTS

Protorque Electrical Alternators

PH300-0002 *12 Volt, 80 Amp*

Yanmar / Hitachi Aftermarket Replacement

Yanmar Diesel with
Internal Regulator, Fan,
and Single Pulley
Fits Yanmar 3JH, 4LH,
6CX, & 6LY Engines
Includes P-Terminal

Replaces:
HITACHI
LR180-03A, -3B, -3C
YANMAR
119573-77200,
119573-77201,
129470-77200

PH300-0005 *12 Volt, 35 Amp*

Yanmar / Hitachi Aftermarket Replacement

Yanmar Diesel with
Internal Regulator, Fan,
and Single Pulley
Fits Yanmar 1GM, 2GM,
3GM, & 3HM Engines

Replaces:
HITACHI
LR135-105
YANMAR
128270-77200

PH300-0020 *12 Volt, 40 Amp*

Yanmar / Hitachi Aftermarket Replacement

Hitachi Style Alternator
for Yanmar
Internal Fan with
Internal Regulator
& Serpentine Pulley

Replaces:
HITACHI
LR140-714B
YANMAR
119836-77200,
119836-77201

PH300-0018 *12 Volt, 80 Amp*

Yanmar / Nippondenso Aftermarket Replacement

Nippondenso Alternator
to Replace Yanmar
Marine - Internal Fan
with Internal Regulator
& Double Pulley

Replaces:
NIPPONDENSO
101211-9940
YANMAR
119773-77200

Protorque No.	Optional Protorque N0.	Description
PH300-0003	PH300-0003-HO	High Output Version
PH300-0004	PH300-0004-HO	High Output Version
PH300-0008	PH300-0008-D	Delco Version
PH300-0008	PH300-0008-DHO	High Output Delco Version
PH300-0008	PH300-0008-OE	Oe Version
PH300-0010	PH300-0013	1-Wire Delco Version
PH300-0010	PH300-0013-CHO	1-Wire Chrome High Output Delco Version
PH300-0010	PH300-0013-HO	1-Wire High Output Delco Version
PH300-0010	PH300-0016	High Output Mando Version
PH300-0010	PH300-0022	2-Wire Delco Version
PH300-0010	PH300-0022-CHO	2-Wire Chrome High Output Delco Version
PH300-0010	PH300-0022-HO	2-Wire High Output Delco Version
PH300-0011	PH300-0012	High Output Mando Version
PH300-0011	PH300-0045	1-Wire Delco Version
PH300-0011	PH300-0046	2-Wire Delco Version
PH300-0012	PH300-0045	1-Wire Delco Version
PH300-0012	PH300-0046	2-Wire Delco Version
PH300-0013	PH300-0013-CHO	1-Wire Chrome High Output Delco Version
PH300-0013	PH300-0013-HO	1-Wire High Output Delco Version
PH300-0016	PH300-0013	1-Wire Delco Version
PH300-0016	PH300-0013-CHO	1-Wire Chrome High Output Delco Version
PH300-0016	PH300-0013-HO	1-Wire High Output Delco Version
PH300-0016	PH300-0022	2-Wire Delco Version
PH300-0016	PH300-0022-CHO	2-Wire Chrome High Output Delco Version
PH300-0016	PH300-0022-HO	2-Wire High Output Delco Version
PH300-0017	PH300-0017-DHO	High Output Delco Version
PH300-0022	PH300-0022-CHO	Chrome High Output Delco Version
PH300-0022	PH300-0022-HO	High Output Delco Version
PH300-0028	PH300-0028-HO	High Output Version

PRECISION
Arizona • 1-800-977-1414
480-966-1550 • fax 480-966-1565
16441 N. 91St. Suite 105 Scottsdale, AZ 85260
Florida • 1-866-417-4072
941-238-0960 • fax 941-238-0965
1899 60th Place East, Bradenton, FL 34203
e-mail: info@wsmparts.com • www.wsmparts.com

Protorque Electrical Starters

4,6 & 8cyl
Straight Across Mounting
Part No. PH140-0020
O.E. No. 50-69864A1,
3855882, 3862307

Mercruiser / OMC/ Volvo
Part No. PH140-0017
O.E. No. 50-806964A2,
3860566, 3860764

Mercruiser / OMC/ Volvo
Part No. PH140-0017-D
O.E. No. 3857747

Mercruiser / OMC/ Volvo
HI-Torque PMGR
Part No. PH140-0017-HT
O.E. No. 50-806964A2,
3860566, 3860764

Mercruiser V8 Starter
Rear Mount
Part No. PH140-0022-CCW
O.E. No. 50-808011A4

No image Available

CW Rotation
Part No. PH140-022-CW

OMC / Volvo Ford 5.0L &
5.8L 10 Tooth Drive
Part No. PH140-0004
O.E. No. 50-806965A4,
987811, 3854190

OMC 2.3L 4 Cylinder Ford
Part No. PH140-0005
O.E. No. 984628

I/O Electrical Solenoids

Part No. PH375-0027
O.E. No. 89-76416A1

Part No. PH375-0028
O.E. No. 89-76545

Part No. PH375-0038
Flat Base
O.E. No. 89-96054

Part No. PH375-0039
Raised Base
O.E. No. 89-96158

Part No. PH375-0036
O.E. No. 89-818999A2

Part No. PH375-0011
O.E. No. 25661

Part No. PH365-0007
Fuse Assembly 90 AMP
O.E. No. 88-79023A91

Part No. PH365-0003
Fuse Assembly 110 AMP

New York • 1-800-222-3375
631-244-8060 • fax 631-244-0556
61 Floyd Run, Bohemia, NY 11716
Puerto Rico
787-832-2499 • fax 787-832-2939
234 Balboa St., Mayaquez, Puerto Rico 00681-2605
e-mail: info@wsmparts.com • www.wsmparts.com

Protorque Trim Motors

Mercruiser 3 Wire
With Reservoir
Part No. PH200-T015
O.E. No. 88183A12

Mercury Complete with
Stainless Steel Bracket
Part No. PH200-T016-SK
O.E. No. 88183A12

Mercruiser Tilt / Trim Motor with
Stainless Steel Bracket
Part No. PH200-T016-K
O.E. No. 14336A9

Mercruiser Motor
With Reservoir
Part No. PH200-T016
O.E. No.: 88183A5, 14336A8

Part No. PH200-T019-SK
Replacement T/T Motor for Late Mercury with Oildyne Style Pump and Reservoir, Low Profile Stainless Steel Bracket. With Solenoids, Wiring Harness, Fuse, and OE Style Plug. Unit Equipped with Quick Connect Fittings
O.E. No. 14336A28

Mercruiser 3 Wire
With 5" Reservoir
Part No. PH200-T063
O.E. No.: 818161A 2

Mercury Three Wire Trim Motor
Without Reservoir
Part No. PH200-T015
O.E. No. 17649A1

OMC 2 Wire 1965-1979
Part No. PH200-T013
O.E. No.: 382220

OMC Stern Drive
1980-1985
Part No. PH200-T009
O.E. No. 982706

PRECISION
Arizona • 1-800-977-1414
480-966-1550 • fax 480-966-1565
16441 N. 91St. Suite 105 Scottsdale, AZ 85260
Florida • 1-866-417-4072
941-238-0960 • fax 941-238-0965
1899 60th Place East, Bradenton, FL 34203
e-mail: info@wsmparts.com • www.wsmparts.com

Protorque Trim Motors

OMC Cobra Stern Drive
Part No. PH200-T056
O.E. No. 984356

OMC Cobra 2 Wire 3 Bolt
1989-1993
Part No. PH200-T023

OMC Stern Drive 2 Wire
Part No. PH200-T051
O.E. No.: 982957

Volvo
Part No. PH200-T012
O.E. No. 3861575

Volvo
Part No. PH200-T007
O.E. No. 854525

Volvo
Part No. PH200-T028
O.E. No. 850834

Volvo
Part No. PH200-T017
Tilt Trim Motor For Late Model
Volvo SP & DP Stern Drive
O.E. No. 3861027-5

Volvo
Part No. PH200-T018
Replacement Tilt Trim Motor for
Late Model Volvo/OMC SX Drives
O.E.No. 3860879

Part No. PH200-T065
Powder Coated Steel
Replacement T/T Bracket
O.E. No.: 42419A1

Part No. PH200-T065-K
Powder Coated Steel Replacement
T/T Bracket Complete with
Solenoids, Wiring Harness, Fuse, and
OE Style Plug

Part No. PH200-T066-K
Stainless Steel Replacement T/T
Bracket Complete with Solenoids,
Wiring Harness, Fuse, and
OE Style Plug

Part No. PH200-T066
OE No. 42419A1
Stainlees Steel Bracket Only

New York • 1-800-222-3375
631-244-8060 • fax 631-244-0556
61 Floyd Run, Bohemia, NY 11716
Puerto Rico
787-832-2499 • fax 787-832-2939
234 Balboa St., Mayaquez, Puerto Rico 00681-2605
e-mail: info@wsmparts.com • www.wsmparts.com

Protorque Trim Motors

Part No. PH200-T067
Stainless Steel Bracket for Late Style Mercury
O.E. No.: 862548A1

Part No. PH200-T064-1B
Mercury, Complete 1 Bolt Type Oil Reservoir. Includes: Gasket, Bolt Screen, Seal and Cap. Fits Older Style PH200-T016 and PH200-T017
O.E. No, 118525A1

Part No. PH200-T064-4B
Mercury, Complete 4 Bolt Type Oil Reservoir. Includes: Gasket, Screws Screen, Seal and Cap. Fits Late Style Oildyne T/T Motors
O.E. No.: 88316A1

Part No. PH200-WH01
Trim Harness
O.E. No.: 84-826802A4

Drive Mid Section

Gimbal Bearing
Part No. 983-295
O.E. No. 30-60794A4, 983937

Gimbal Bearing Puller
Part No. 983-300

PRECISION
Arizona • 1-800-977-1414
480-966-1550 • fax 480-966-1565
16441 N. 91St. Suite 105 Scottsdale, AZ 85260
Florida • 1-866-417-4072
941-238-0960 • fax 941-238-0965
1899 60th Place East, Bradenton, FL 34203
e-mail: info@wsmparts.com • www.wsmparts.com

Re-Build Kits

One convenient part number gives you everything you need.

WSM rebuild kits come complete with all parts needed for your engine

Kits include:

- WSM pistons complete with Japanese rings, pins, and clips
- Highest quality gaskets available
- Crank bearings, rod bearings, and rod bolts

Horse Power	Year	Kit No.	Bore Size
70 HP	91-95	**100-205-10**	STD
Std. Bore 3.375"		**100-205-11**	.010
Bottom Guided		**100-205-12**	.020
		100-205-13	.030
		100-205-14	.040

Kit Includes:

Description	Part No.	Qty.
Piston Kit	**100-205** series	3
Gasket Kit	**500-106**	1
Lower Main Bearings	**010-258**	1
Center Main Bearings	**010-281**	3
Upper Main Bearing	**010-206-01**	1
Upper Rod Bearings	**010-134-26**	3
Lower Rod Bearings	**010-138**	3
Rod Bolts	**805-200**	6

Horse Power	Year	Kit No.	Bore Size
90 HP	91-94	**100-205-20**	STD
Std. Bore 3.375"		**100-205-21**	.010
Bottom Guided		**100-205-22**	.020
		100-205-23	.030
		100-205-24	.040

Kit Includes:

Description	Part No.	Qty
Piston Kit	**100-205** series	3
Gasket Kit	**500-108**	1
Lower Main Bearings	**010-258**	1
Center Main Bearings	**010-281**	2
Upper Main Bearing	**010-206-01**	1
Upper Rod Bearings	**010-134-26**	3
Lower Rod Bearings	**010-138**	3
Rod Bolts	**805-200**	6

Horse Power	Year	Kit No.	Bore Size
75 HP	96-98	**100-210-10**	STD
Std. Bore 3.375"		**100-210-11**	.010
Top Guided		**100-210-12**	.020
		100-210-13	.030
		100-210-14	.040

Kit Includes:

Description	Part No.	Qty
Piston Kit	**100-210** series	3
Gasket Kit	**500-106**	1
Lower Main Bearings	**010-258**	1
Center Main Bearings	**010-281**	2
Upper Main Bearing	**010-206-01**	1
Upper Rod Bearings	**010-134-26**	3
Lower Rod Bearings	**010-138**	3
Rod Bolts	**805-200**	6

Horse Power	Year	Kit No.	Bore Size
70 HP	99	**100-210-20**	STD
90 HP	95-99	**100-210-21**	.010
Std. Bore 3.375"		**100-210-22**	.020
Top Guided		**100-210-23**	.030
		100-210-24	.040

Kit Includes:

Description	Part No.	Qty
Piston Kit	**100-210** series	3
Gasket Kit	**500-107**	1
Lower Main Bearings	**010-258**	1
Center Main Bearings	**010-281**	2
Upper Main Bearing	**010-206-01**	1
Upper Rod Bearings	**010-134-26**	3
Lower Rod Bearings	**010-138**	3
Rod Bolts	**805-200**	6

IS MY MOTOR TOP OR BOTTOM GUIDED?

Compare your forging number to the chart below:

2-4 cyl. Top Guided: Forging number 640-9612

2-5 cyl. Bottom Guided: Forging numbers 335016-3 or 600-818052

New York • 1-800-222-3375
631-244-8060 • fax 631-244-0556
61 Floyd Run, Bohemia, NY 11716

Puerto Rico
787-832-2499 • fax 787-832-2939
234 Balboa St., Mayaquez, Puerto Rico 00681-2605

e-mail: info@wsmparts.com • www.wsmparts.com

Re-Build Kits

Horse Power	Year	Kit No.	Bore Size
SportJet 90 HP	96-98	**100-210-30**	STD
Std. Bore 3.375"		**100-210-31**	.010
Top Guided		**100-210-32**	.020
		100-210-33	.030
		100-210-34	.040

Kit Includes:

Description	Part No.	Qty
Piston Kit	**100-210** series	3
Gasket Kit	**500-109**	1
Lower Main Bearings	**010-258**	1
Center Main Bearings	**010-281**	2
Upper Main Bearing	**010-206-01**	1
Upper Rod Bearings	**010-136-29T**	3
Lower Rod Bearings	**010-150-01-13**	3
Rod Bolts	**805-200**	6

One convenient part number gives you everything you need.

WSM rebuild kits come complete with all parts needed for your engine

Kits include:
- WSM pistons complete with Japanese rings, pins, and clips
- Highest quality gaskets available
- Crank bearings, rod bearings, and rod bolts

Horse Power	Year	Kit No.	Bore Size
120 HP 4 Cyl.	96-99	**100-210-40**	STD
Std. Bore 3.375"		**100-210-41**	.010
Top Guided		**100-210-42**	.020
		100-210-43	.030
		100-210-44	.040

Kit Includes:

Description	Part No.	Qty
Piston Kit	**100-210** series	4
Gasket Kit	**500-111**	1
Lower Main Bearing	**010-258**	1
Center Main Bearings	**010-281**	2
Upper Main Bearing	**010-206-01**	1
Upper Rod Bearings	**010-136-29T**	4
Lower Rod Bearings	**010-150-01-13**	4
Rod Bolts	**805-200**	8

Horse Power	Year	Kit No.	Bore Size
120 HP	91-94	**100-205-40**	STD
Std. Bore 3.375"		**100-205-41**	.010
Bottom Guided		**100-205-42**	.020
		100-205-43	.030
		100-205-44	.040

Kit Includes:

Description	Part No.	Qty
Piston Kit	**100-205** series	4
Gasket Kit	**500-110**	1
Lower Main Bearings	**010-258**	1
Center Main Bearings	**010-281**	3
Upper Main Bearing	**010-206-01**	1
Upper Rod Bearings	**010-134-26**	4
Lower Rod Bearings	**010-138**	4
Rod Bolts	**805-200**	8

Horse Power	Year	Kit No.	Bore Size
Sport Jet 90 HP	93-95	**100-205-30**	STD
Std Bore 3.375"		**100-205-31**	0.010
Bottom Guided		**100-205-32**	0.020
		100-205-33	0.030
		100-205-34	0.040

Kit Includes:

Description	Part No.	Qty
Piston Kit	**100-205** series	3
Gasket Kit	**500-109**	1
Lower Main Bearings	**010-258**	1
Center Main Bearings	**010-281**	3
Upper Main Bearing	**010-206-01**	1
Upper Rod Bearings	**010-134-26**	3
Lower Rode Bearings	**010-138**	3
Rod Bolts	**805-200**	6

Horse Power	Year	Kit No.	Bore Size
Sport Jet 4 Cyl	96-00	**100-210-50**	STD
Std. Bore 3.375"		**100-210-51**	.010
Top Guided		**100-210-52**	.020
		100-210-53	.030
		100-210-54	.040

Kit Includes:

Description	Part No.	Qty
Piston Kit	**100-210** series	4
Gasket Kit	**500-113**	1
Lower Main Bearings	**010-258**	1
Center Main Bearings	**010-281**	3
Upper Main Bearing	**010-206-01**	1
Upper Rod Bearings	**010-136-29T**	4
Lower Rod Bearings	**010-150-01**	4
Rod Bolts	**805-200**	8

IS MY MOTOR TOP OR BOTTOM GUIDED?
Compare your forging number to the chart below:
2-4 cyl. Top Guided: Forging number 640-9612
2-5 cyl. Bottom Guided: Forging numbers 335016-3 or 600-818052

PRECISION
Arizona • 1-800-977-1414
480-966-1550 • fax 480-966-1565
16441 N. 91St. Suite 105 Scottsdale, AZ 85260
Florida • 1-866-417-4072
941-238-0960 • fax 941-238-0965
1899 60th Place East, Bradenton, FL 34203
e-mail: info@wsmparts.com • www.wsmparts.com

WSM Pistons

3.375" 17.5mm PISTON KIT

Piston: **100-205K Bottom Guided**
O.E. No.: 700-819690A 1
Ring Set: 200-210*
Wrist Pin: 300-205
Clips: 400-17

3.375" 19.5mm PISTON KIT

Piston: 100-210K Top Guided
O.E. No.: 700 828304A 2
Ring Set: 200-210*
Wrist Pin: 300-210
Clips: 400-19

PISTON KIT APPLICATION CHART / RING SETS

Model	Cyl.	Bore	Part No.	Size	Ring No.	Size
CHRYSLER *(Chryslers with 3.312 bore are not avaliable in WSM)*						
115 HP 77-82	4	3.375	**100-205K**	Std.	**200-210***	Std.
Must use bearing kit #010-134-26			**100-205-04K**	.010	**200-210-04**	.010
			100-205-05K	.020	**200-210-05**	.010
			100-205-06K	.030	**200-210-06**	.030
			100-205-07K	.040	**200-210-07**	.040
140 HP 78-84	4	3.375	**100-205K**	Std.	**200-210***	Std.
Must use bearing kit #010-134-26			**100-205-04K**	.010	**200-210-04**	.010
			100-205-05K	.020	**200-210-05**	.020
			100-205-06K	.030	**200-210-06**	.030
			100-205-07K	.040	**200-210-07**	.040
FORCE						
40 HP 92-95	2	3.375	**100-205K**	Std.	**200-210***	Std.
50 HP 92-95	2		**100-205-04K**	.010	**200-210-04**	.010
70 HP 91-95	3		**100-205-05K**	.020	**200-210-05**	.020
90 HP 91-94	3		**100-205-06K**	.030	**200-210-06**	.030
120 HP 91-95	4		**100-205-07K**	.040	**200-210-07**	.040
Bottom Guided						
Must use bearing kit #010-134-26						
40 HP 96-97	2	3.375	**100-210K**	Std.	**200-210***	Std.
50 HP 96-98	2		**100-210-04K**	.010	**200-210-04**	.010
75 HP 96-98	3		**100-210-05K**	.020	**200-210-05**	.020
90 HP 96-98	3		**100-210-06K**	.030	**200-210-06**	.030
120 HP 96-98	4		**100-210-07K**	.040	**200-210-07**	.040
Top Guided						
120 HP 90-94	4	3.375	**100-205K**	Std.	**200-210***	Std.
150 HP 89-94	5		**100-205-04K**	.010	**200-210-04**	.010
Bottom Guided			**100-205-05K**	.020	**200-210-05**	.020
Must use bearing kit #010-134-26			**100-205-06K**	.030	**200-210-06**	.030
			100-205-07K	.040	200-210-07	.040

**200-210 series ring sets contains 2 - 7deg rings. For a 30deg top & rectangular bottom order #200-206 series.*

New York • 1-800-222-3375
631-244-8060 • fax 631-244-0556
61 Floyd Run, Bohemia, NY 11716
Puerto Rico
787-832-2499 • fax 787-832-2939
234 Balboa St., Mayaquez, Puerto Rico 00681-2605
e-mail: info@wsmparts.com • www.wsmparts.com

Connecting Rod

FORCE
TOP GUIDED ROD
Part No. 800-206
O.E. 640-9612A 7
1996-Up 40-120 HP

Rod Bolt

FORCE
Part No. 805-200
O.E. No. 10-91012
Fits: 40-150 hp

Bearings *Picture Gallery*

Upper Rod Bearing
(Includes needles & washers)
Part No. 010-134-26
O.E. 23-F366215 &
31-F335217-1
Fits: see applications on next page.

Upper Rod Bearing
Needles (Includes needles & washers)
Part No. 010-136-29
O.E. 29-47270 / 8M0032839
Fits: see applications on next page.

Upper Rod Bearing
(Includes needles & washers)
Part No. 010-136-29T
O.E. 29-47270 & 12-812876
Fits: see applications on next page.

Lower Rod Bearing
(Includes needles & retainers)
Part No. 010-138
O.E. No. 31-62596A1
Fits: see applications on next page.

Lower Rod Beaing
(Includes needles only)
Part No. 010-138-16
O.E. No. 31-62596A1
Same application as 010-138, see chart on next page

Lower Rod Bearing
Part No. 010-150-01
O.E. No. 31-17514A2
Fits: see applications on next page.

Upper Main Bearing
Part No. 010-206-01
O.E. 30-803893T
Fits: see applications on next page.

Upper Main Bearing
Part No. 010-221-01
O.E. 30-63742
Fits: see applications on next page.

Center Main Bearing
Part No. 010-281
O.E. No. FA85655 1,
31-89903, 31-67445
Fits: see applications on next page.

Center Rollers Only
Part No. 010-281-01
Same application
as 010-281
Fits: see applications on next page.

Center Main Outer Race
Part No. 010-281-02
Same application
as 010-281
See applications on next page

Lower Main Bearing
with Seal
Part No. 010-258
O.E. No. 31-818050T4
Fits: see applications on next page.

PRECISION
Arizona • 1-800-977-1414
480-966-1550 • fax 480-966-1565
16441 N. 91St. Suite 105 Scottsdale, AZ 85260
Florida • 1-866-417-4072
941-238-0960 • fax 941-238-0965
1899 60th Place East, Bradenton, FL 34203
e-mail: info@wsmparts.com • www.wsmparts.com

Bearings

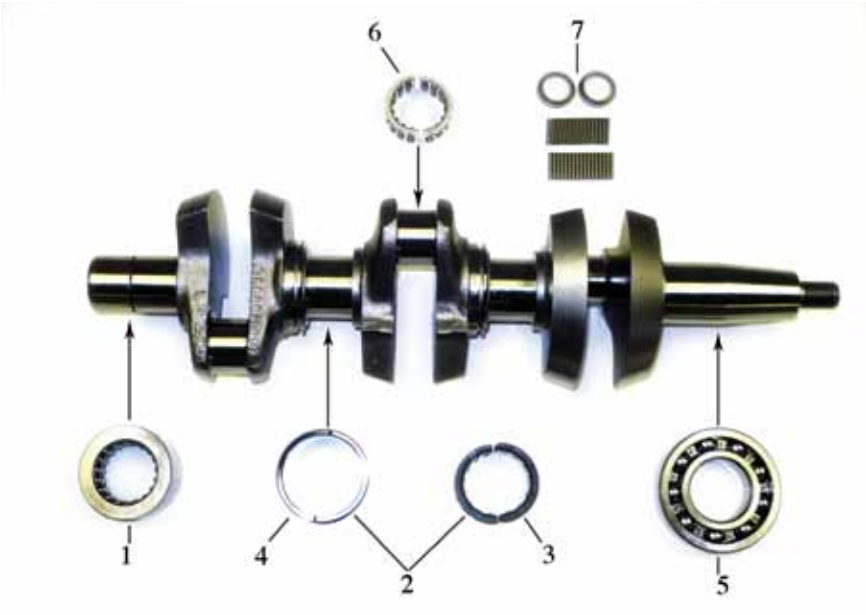

Horse Power	Year	Cyl.	Ref #1 Lower Main Bearing	Ref #2 Center Main Bearing Cmplte	Ref #3 Center Main Split Caged	Ref #4 Center Main Outer Race	Ref #5 Upper Main Bearing	Ref #6 Lower Rod Split Caged	Ref #6 Lower Rod Needles Only	Ref #7 Upper Rod Needles
40-50	96 & up	2					010-206-01	010-150-01		010-136-29T
45		2						010-138	010-138-16	010-134-26
50	1981-87	2					010-221-01	010-138	010-138-16	010-134-26
55	1972-76	2						010-138	010-138-16	010-134-26
70	1970-96	3	010-258	010-281	010-281-01	010-281-02	010-206-01	010-138	010-138-16	010-134-26
75	1974-83	3	010-258	010-281	010-281-01	010-281-02	010-206-01	010-138	010-138-16	010-134-26
75	96-99	3	010-258	010-281	010-281-01	010-281-02	010-206-01	010-150-01		010-136-29T
85	1973-88	3	010-258	010-281	010-281-01	010-281-02	010-206-01	010-138	010-138-16	010-134-26
90	1974-95	3	010-258	010-281	010-281-01	010-281-02	010-206-01	010-138	010-138-16	010-134-26
90	1996-99	3	010-258	010-281	010-281-01	010-281-02	010-206-01	010-150-01		010-136-29T
100	1979-81	4	010-258	010-281	010-281-01	010-281-02	010-206-01	010-138	010-138-16	010-134-26
	83									
105	1972-78	4	010-258	010-281	010-281-01	010-281-02	010-206-01	010-138	010-138-16	010-134-26
	1982									
115	1977-83	4	010-258	010-281	010-281-01	010-281-02	010-206-01	010-138	010-138-16	010-134-26
120	1971-95	4	010-258	010-281	010-281-01	010-281-02	010-206-01	010-138	010-138-16	010-134-26
120	1996-99	4	010-258	010-281	010-281-01	010-281-02	010-206-01	010-150-01	010-138-16	010-136-29T
125	1983-88	4	010-258	010-281	010-281-01	010-281-02	010-206-01	010-138	010-138-16	010-134-26
130	1972	4	010-258	010-281	010-281-01	010-281-02	010-206-01	010-138	010-138-16	010-134-26
135	1974-77	4	010-258	010-281	010-281-01	010-281-02	010-206-01	010-138	010-138-16	010-134-26
140	1978-83	4	010-258	010-281	010-281-01	010-281-02	010-206-01	010-138	010-138-16	010-134-26
150	1990-94	5	010-258	010-281	010-281-01	010-281-02	010-206-01	010-138	010-138-16	010-134-26

New York • 1-800-222-3375
631-244-8060 • fax 631-244-0556
61 Floyd Run, Bohemia, NY 11716
Puerto Rico
787-832-2499 • fax 787-832-2939
234 Balboa St., Mayaquez, Puerto Rico 00681-2605
e-mail: info@wsmparts.com • www.wsmparts.com

Gasket Kits

POWER HEAD GASKET KIT - 2 CYL.

Kit No. 500-100 O.E. No. 27-809755A 1

40 hp 1981-87, 88 A model 45 hp 1974-83
50 hp 1981-87, 88 A mode 55 hp 1972-76

INDIVIDUAL GASKETS/SEALS

Item #	Description	O.E. No.	Qty.	Part No.
1	Head Gasket	27-F658529	1	505-70
2	Head Cover Gasket		1	505-71
3	Base Gasket	F307279-2	1	510-50
4	Port Cover Gasket	27-F40223	2	517-10
5	Thermostat Cover	27-819377	1	517-11
6	Drain Plate Gasket	27-F93748-1	1	517-12
7	Drain Plate Cover Gaske	27-F93472-1	1	517-13
8	Intake Manifold Gasket	27-F433168	1	517-14
9	Intake Plate Gasket	27-F433406	1	517-15
10	Carb. Gasket	27-F40906-1	1	517-16
11	Cover Gasket	27-F40833-4	1	517-17
12	Exhaust Plate Gasket	F40154-3	2	522-10
13	Bearing Cage Gasket	F366277	1	541-10
14	Crank Case Rubber Seal	27-F269122-1	1	541-11
15	Lower Crank Seal	26-819394	2	550-77

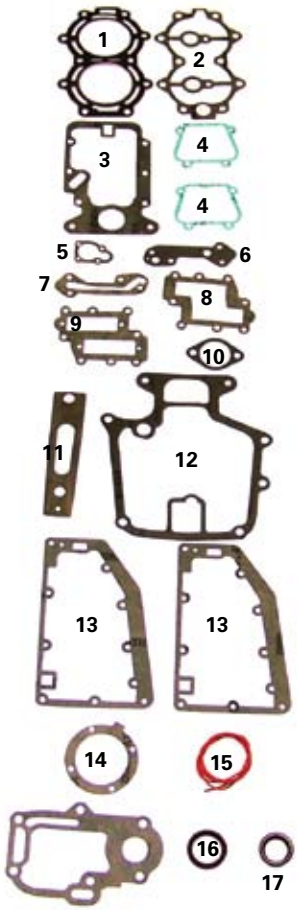

POWER HEAD GASKET KIT - 2 CYL.

Kit No. 500-101 O.E.No. 27-809751A 1

40 / 50 hp 1998 B,C,D Models

INDIVIDUAL GASKETS/SEALS

Item #	Description	O.E. No.	Qty.	Part No.
1	Head Gasket	27-F658529	1	505-70
2	Head Cover Gasket		1	505-71
3	Base Gasket		1	510-51
4	Port Cover Gasket	27-F40223	2	517-10
5	Thermostat Cover	27-F97067	1	517-11
6	Drain Plate Gasket	27-F93748-1	1	517-12
7	Drain Plate Cover Gasket	27-F93472-1	1	517-13
8	Intake Manifold Gasket	27-433168	1	517-14
9	Intake Plate Gasket	27-F433406	1	517-15
10	Carb. Gasket	27-F40906-1	1	517-16
11	Cover Gasket	27-F40833-4	1	517-17
12	Base Gasket	27-F684453-1	1	517-18
13	Exhaust Plate Gasket	F40154-3	2	522-10
14	Bearing Cage Gasket	F366277	1	541-10
15	Crank Case Rubber Seal	27-F269122-1	1	541-11
16	Upper Crank Seal	26-828626	1	550-76
17	Lower Crank Seal	26-819394	1	550-77

PRECISION
Arizona • 1-800-977-1414
480-966-1550 • fax 480-966-1565
16441 N. 91St. Suite 105 Scottsdale, AZ 85260
Florida • 1-866-417-4072
941-238-0960 • fax 941-238-0965
1899 60th Place East, Bradenton, FL 34203
e-mail: info@wsmparts.com • www.wsmparts.com
VISA MasterCard AMERICAN EXPRESS DISCOVER NOVUS

Gasket Kits

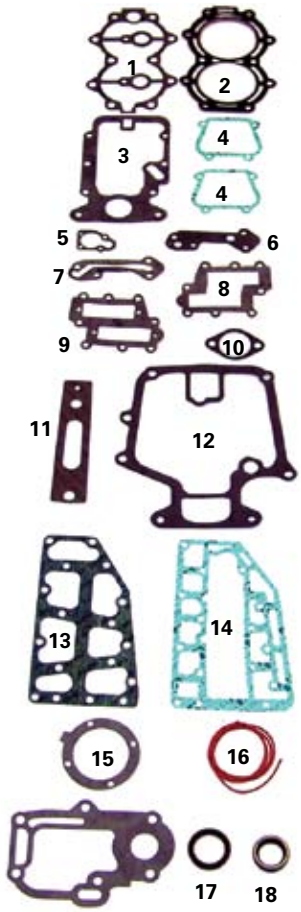

POWER HEAD GASKET KIT - 2 CYL.

Kit No. 500-102 O.E. No. 27-809746A 1 / FG1033

50 hp 1989-94 A,B,C,D Models

INDIVIDUAL GASKETS/SEALS

Item #	Description	O.E. No.	Qty.	Part No.
1	Head Cover Gasket		1	**505-71**
2	Head Gasket	27-F691529-1	1	**505-72**
3	Base Gasket	27-F684279	1	**510-51**
4	Port Cover Gasket	27-F40223	2	**517-10**
5	Thermostat Cover	27-F97067	1	**517-11**
6	Drain Plate Gasket	27-F93748-1	1	**517-12**
7	Drain Plate Cover Gasket	27-F93472-1	1	**517-13**
8	Intake Manifold Gasket	27-433168	1	**517-14**
9	Intake Plate Gasket	27-F433406	1	**517-15**
10	Carb. Gasket	27-F40906-1	1	**517-16**
11	Cover Gasket	27-F40833-4	1	**517-17**
12	Base Gasket	27-F684453-1	1	**517-18**
13	Exhaust Gasket	27-F691153	1	**517-20**
14	Exhaust Gasket	27-F691154	1	**517-21**
15	Bearing Cage Gasket	F366277	1	**541-10**
16	Crank Case Rubber Seal	27-F269122-1	1	**541-11**
17	Upper Crank Seal	F474146	1	**550-76**
18	Lower Crank Seal	26-819394	1	**550-77**

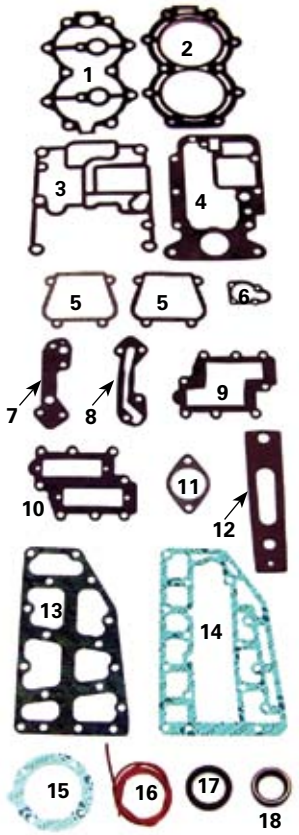

POWER HEAD GASKET KIT - 2 CYL.

Kit No. 500-103 O.E. No. 27-820751A 2

50 hp 1995-99 A, B, C, D models

INDIVIDUAL GASKETS/SEALS

Item #	Description	O.E. No.	Qty.	Part No.
1	Head Cover Gasket		1	**505-71**
2	Head Gasket	27-691529-1	1	**505-72**
3	Adapter Plate Gasket	27-826738	1	**510-52**
4	Base Gasket	27-82687-1	1	**510-53**
5	Port Cover Gasket	27-820500A 3	2	**517-10**
6	Thermostat Cover	27-F97067	1	**517-11**
7	Drain Plate Gasket	27-F93748-1	1	**517-12**
8	Drain Plate Cover Gasket	27-F93472-1	1	**517-13**
9	Intake Manifold Gasket	27-433168	1	**517-14**
10	Intake Plate Gasket	27-F433406	1	**517-15**
11	Carb. Gasket	27-F40906-1	1	**517-16**
12	Cover Gasket	27-F40833-4	1	**517-17**
13	Exhaust Gasket	27-F691153	1	**517-20**
14	Exhaust Gasket	27-F691154	1	**517-21**
15	Bearing Cage Gasket	F366277	1	**541-10**
16	Crank Case Rubber Seal	27-F269122-1	1	**541-11**
17	Upper Crank Seal	26-828626	1	**550-76**
18	Lower Crank Seal	26-819394	1	**550-77**

New York • 1-800-222-3375
631-244-8060 • fax 631-244-0556
61 Floyd Run, Bohemia, NY 11716
Puerto Rico
787-832-2499 • fax 787-832-2939
234 Balboa St., Mayaquez, Puerto Rico 00681-2605
e-mail: info@wsmparts.com • www.wsmparts.com

Gasket Kits

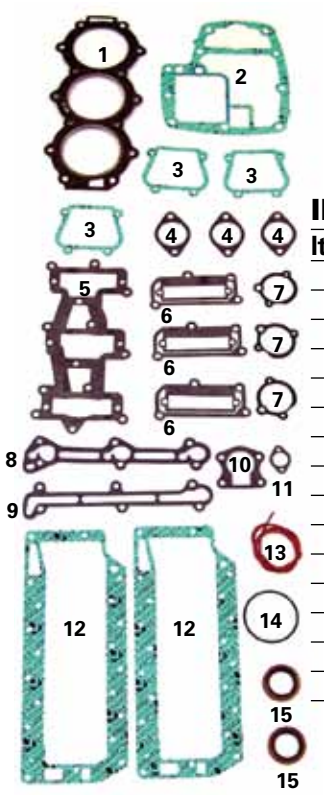

POWER HEAD GASKET KIT - 3 CYL.

Kit No. 500-105 O.E. No. 27-809753A 1

70 hp 1970-73 70 hp 1979-80 75 hp 74-84
85 hp 70-89 90 hp 83, 89-90

INDIVIDUAL GASKETS/SEALS

Item #	Description	O.E. No.	Qty.	Part No.
1	Head Gasket	27-820438	1	**505-75**
2	Base Gasket	27-819381	1	**510-55**
3	Port Cover Gasket	27-820500A 3	3	**517-10**
4	Carb. Gasket	27-828925	3	**517-16**
5	Reed Block Gasket	27-F85159-1	1	**517-25**
6	Reed Block Gasket	27-F85168-2	3	**517-26**
7	Carb. Gasket	27-F481836	3	**517-28**
8	Drain Gasket	27-F85748-2	1	**517-29**
9	Drain Gasket	F85472-2	1	**517-30**
10	Thermostat Gasket	27-828319	1	**517-31**
11	Bypass Valve Gasket	F85762	1	**517-32**
12	Exhaust Gasket	27-F85154-1	2	**522-11**
13	Crankcase Gasket	F184122-1	1	**541-13**
14	Bearing Cage O-Ring	25-F84278	1	**541-14**
15	Upper/Lower Crank Seals	26-828627	2	**550-80**

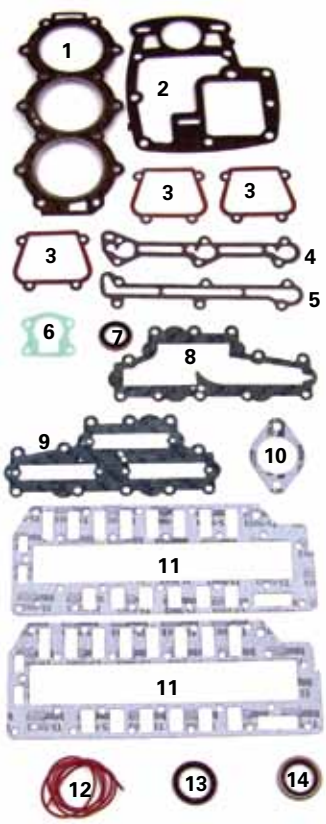

POWER HEAD GASKET KIT - 3 CYL.

Kit No. 500-106 O.E. No. 27-820724A 2
(Single Carb.)

70 hp 1991-95 75 hp 1996-98

INDIVIDUAL GASKETS/SEALS

Item #	Description	O.E. No.	Qty.	Part No.
1	Head Gasket	27-820438	1	**505-75**
2	Base Gasket .050 Thick	27-819381 4	1	**510-56**
3	Port Cover Gasket	27-820500A 3	3	**517-10**
4	Drain Gasket	27-F85748-2	1	**517-29**
5	Drain Gasket	F85472-2	1	**517-30**
6	Thermostat Gasket	27-828319	1	**517-31**
7	Thermostat Seal	26-F664914	1	**517-34**
8	IntakeManifold Gasket	27-819114-1	1	**517-38**
9	IntakeManifold Gasket	27-819113	1	**517-39**
10	Carb. Gasket	27-F440906	1	**517-40**
11	Exhaust Gasket	27-819023-1	2	**522-12**
12	Crankcase Gasket	F184122-1	1	**541-13**
13	Upper Crank Seal	26-828626	1	**550-76**
14	Lower Crank Seal	26-828627	2	**550-80**

The Under Base Adaptor Gasket is not included in kit #500-106

PRECISION
Arizona • 1-800-977-1414
480-966-1550 • fax 480-966-1565
16441 N. 91St. Suite 105 Scottsdale, AZ 85260
Florida • 1-866-417-4072
941-238-0960 • fax 941-238-0965
1899 60th Place East, Bradenton, FL 34203
e-mail: info@wsmparts.com • www.wsmparts.com
VISA MasterCard AMERICAN EXPRESS DISCOVER NOVUS

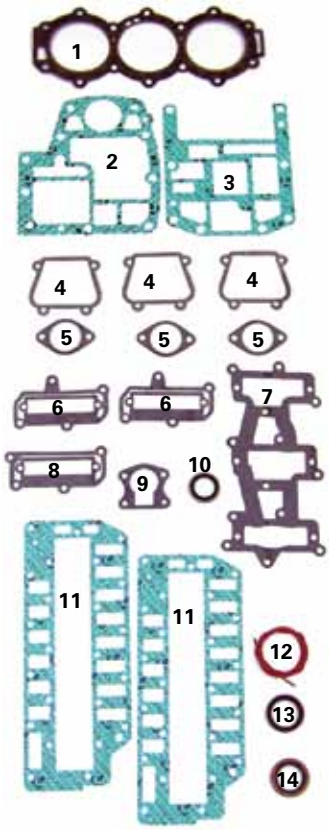

POWER HEAD GASKET KIT - 3 CYL.

Kit No. 500-107 O.E. No. 27-809122A 2

75 hp 99 90 hp 95-99

INDIVIDUAL GASKETS/SEALS

Item #	Description	O.E. No.	Qty.	Part No.
1	Head Gasket	27-820438	1	**505-75**
2	Upper Base Gasket	27-826549	1	**510-57**
3	Lower Base Gasket	27-826550	1	**510-58**
4	Port Cover Gasket	27-820500A-3	3	**517-10**
5	Carb. Gasket	27-F40906-1	3	**517-16**
6	Reed Block Gasket	27-819733	2	**517-23**
7	Reed Block Gasket	27-F85159-1	1	**517-25**
8	Reed Block Gasket	27-F85168-2	1	**517-26**
9	Thermostat Gasket	27-828319	1	**517-31**
10	Thermostat Seal	26-F664914	1	**517-34**
11	Exhaust Gasket	27-819023-1	2	**522-12**
12	Crankcase Gasket	F184122-1	1	**541-13**
13	Upper Crank Seal	26-828626	1	**550-76**
14	Lower Crank Seal	26-828627	1	**550-80**

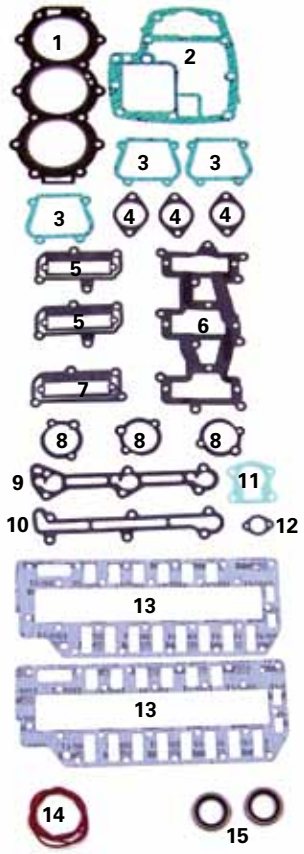

POWER HEAD GASKET KIT - 3 CYL.

Kit No. 500-108 O.E. No. 27-820725A 1

90 hp 1991-94

INDIVIDUAL GASKETS/SEALS

Item #	Description	O.E. No.	Qty.	Part No.
1	Head Gasket	27-820438	1	**505-75**
2	Base Gasket	27-819381	1	**510-55**
3	Port Cover Gasket	27-820500A-3	3	**517-10**
4	Carb. Gasket	27-F40906-1	3	**517-16**
5	Bottom Reed Block	27-819733	2	**517-23**
6	Reed Block Gasket	F85159-2	1	**517-25**
7	Top Reed Block Gasket	F85168-1	1	**517-26**
8	Carb. Gasket	F481836	3	**517-28**
9	Drain Gasket	F85748-2	1	**517-29**
10	Drain Gasket	F85472-2	1	**517-30**
11	Thermostat Gasket	27-828319	1	**517-31**
12	Bypass Valve Gasket	F85762	1	**517-32**
13	Exhaust Gasket	27-819023 1	2	**522-12**
14	Crankcase Gasket	F184122-1	1	**541-13**
15	Upper/Lower Crank Seals	26-828627	2	**550-80**

New York • 1-800-222-3375
631-244-8060 • fax 631-244-0556
61 Floyd Run, Bohemia, NY 11716
Puerto Rico
787-832-2499 • fax 787-832-2939
234 Balboa St., Mayaquez, Puerto Rico 00681-2605
e-mail: info@wsmparts.com • www.wsmparts.com

Gasket Kits

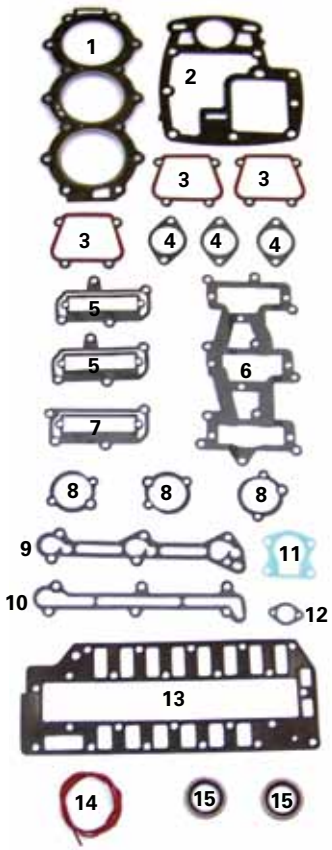

POWER HEAD GASKET KIT - 3 CYL.

Kit No. 500-109

O.E. No. 27-820598A1, 27-809469A 2

Sport Jet 90-95 HP All

INDIVIDUAL GASKETS/SEALS

Item #	Description	O.E. No.	Qty.	Part No.
1	Head Gasket	27-820438	1	505-75
2	Base Gasket	27-819381 4	1	510-56
3	Port Cover Gasket	27-820500A-3	3	517-10
4	Carb. Gasket	27-F40906-1	3	517-16
5	Bottom Reed Block	27-819733	2	517-23
6	Reed Block Gasket	F85159-2	1	517-25
7	Top Reed Block Gasket	F85168-1	1	517-26
8	Carb. Gasket	F481836	3	517-28
9	Drain Gasket	F85748-2	1	517-29
10	Drain Gasket	F85472-2	1	517-30
11	Thermostat Gasket	27-828319	1	517-31
12	Bypass Valve Gasket	F85762	1	517-32
13	Exhaust Gasket	27-819023 1	1	522-14
14	Crankcase Gasket	F184122-1	1	541-13
15	Upper/Lower Crank Seals	26-828627	2	550-80

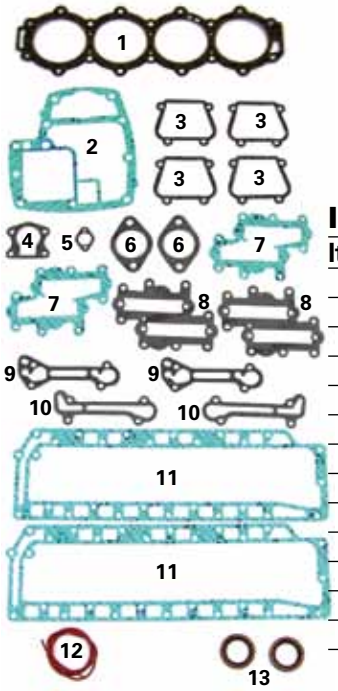

POWER HEAD GASKET KIT - 4 CYL.

Kit No. 500-110 O.E. No. 27-809754A 1

100 hp 79-84 105 hp 72-83

115 hp 77-83 120 hp 71-77, 89-94

INDIVIDUAL GASKETS/SEALS

Item #	Description	O.E. No.	Qty.	Part No.
1	Head Gasket	27-824615-2	1	505-80
2	Base Gasket	27-819381	1	510-55
3	Port Cover Gasket	27-820500A 3	4	517-10
4	Thermostat Gasket	27-828319	1	517-31
5	Bypass Valve Gasket	F85762	1	517-32
6	Carb. Gasket	27-F440906	2	517-40
7	Carb. Adapter Gasket	27-828316	2	517-45
8	Carb. Adapter Gasket	F406406	2	517-46
9	Drain Cover Gasket	27-F84748-3	2	517-48
10	Drain Cover Gasket	27-F84472-5	2	517-49
11	Exhaust Mainifold Gasket	27-F372154-1	2	522-13
12	Crank Case Rubber Seal	27-F269122-1	1	541-11
13	Upper/Lower Crank Seals	26-828627	2	550-80

PRECISION
Arizona • 1-800-977-1414
480-966-1550 • fax 480-966-1565
16441 N. 91St. Suite 105 Scottsdale, AZ 85260
Florida • 1-866-417-4072
941-238-0960 • fax 941-238-0965
1899 60th Place East, Bradenton, FL 34203
e-mail: info@wsmparts.com • www.wsmparts.com

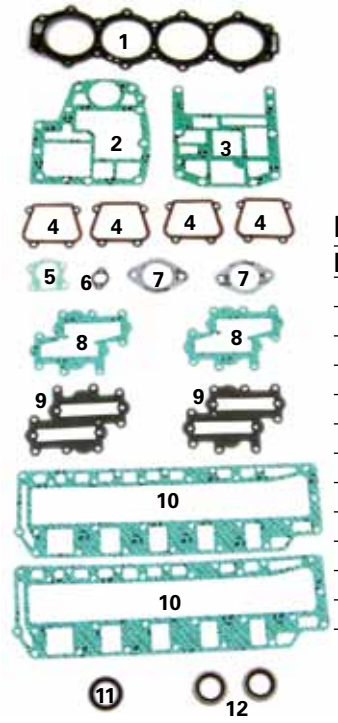

POWER HEAD GASKET KIT - 4 CYL.

Kit No. 500-111 O.E. No. 27-809125A 2

120 hp 95-99

INDIVIDUAL GASKETS/SEALS

Item #	Description	O.E. No.	Qty.	Part No.
1	Head Gasket	27-824615-2	1	505-80
2	Upper Base Gasket	27-826549	1	510-57
3	Lower Base Gasket	27-826550	1	510-58
4	Port Cover Gasket	27-820500A-3	4	517-10
5	Thermostat Gasket	27-828319	1	517-31
6	Bypass Valve Gasket	F85762	1	517-32
7	Carb. Gasket	27-F440906	2	517-40
8	Carb. Adapter Gasket	27-828316	2	517-45
9	Carb. Adapter Gasket	F406406	2	517-46
10	Exhaust Gasket	27-819024-2	2	522-15
11	Upper Crank Seal	26-828626	1	550-76
12	Upper/Lower Crank Seals	26-828627	2	550-80

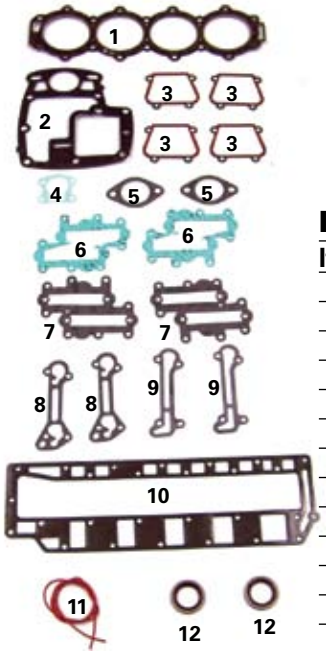

POWER HEAD GASKET KIT - 4 CYL.

Kit No. 500-113 O.E. No. 27-809182A 1

Sport Jet 120hp All

INDIVIDUAL GASKETS/SEALS

Item #	Description	O.E. No.	Qty.	Part No.
1	Head Gasket	27-824615-2	1	505-80
2	Base Gasket .050 Thick	27-819381-4	1	510-56
3	Port Cover Gasket	27-820500A-3	4	517-10
4	Thermostat Gasket	27-828319	1	517-31
5	Carb. Gasket	27-F440906	2	517-40
6	Carb. Adapter Gasket	27-828316	2	517-45
7	Carb. Adapter Gasket	F406406	2	517-46
8	Drain Cover Gasket	27-F84748-3	2	517-48
9	Drain Cover Gasket	27-F84472-5	2	517-49
10	Exhaust Mainifold Gasket	27-819711	1	522-16
11	Crank Case Rubber Seal	27-F269122-1	1	541-11
12	Upper/Lower Crank Seals	26-828627	2	550-80

New York • 1-800-222-3375
631-244-8060 • fax 631-244-0556
61 Floyd Run, Bohemia, NY 11716
Puerto Rico
787-832-2499 • fax 787-832-2939
234 Balboa St., Mayaquez, Puerto Rico 00681-2605
e-mail: info@wsmparts.com • www.wsmparts.com

Impellers

Photo Gallery

Part No. 700-115
O.E. No. 47-803630T, F523065/-1

Part No. 700-120
O.E. No. 47-F40065-2

Part No. 700-135
O.E. No. 47-F462065

Part No. 700-140
O.E. No. 47-F436065-2

Part No. 700-155
O.E. No. 47-43026T

Part No. 700-205
O.E. No. 47-89984, F694065

Part No. 700-216
O.E. No. 47-42038-2

Part No. 700-225
O.E. No. 47-85089-10

Chrysler Impellers

Application Chart

HP	Model	Year	Impeller
CHRYSLER			
35	350-355 HA,HB,HC,HD 356/357HA,HB		**700-120**
35	350 HF		**700-120**
35	351HF		**700-120**
35	352/353H2P/H9L, 353HOM,HIN		**700-120**
35	354HF		**700-120**
35	355HF		**700-120**
35	356HD		**700-120**
35	357HD		**700-120**
45	450-457HA,HC,HD 458/459HA, HB		**700-120**
55	554-559HA HD		**700-120**
75	H0756H80F-H0758H84G	1980-84	**700-115**
85	H0850H79A-H0858H82E	1979-82	**700-115**
90	H0908V84B	1983-84	**700-115**
100	H1000H79A-H1008H84D	1979-84	**700-115**
105	1056/1057HA-HE, 1058HA-HC H1058H82G-H1058V83H	1982-83	**700-115**
115	H1150H79A-H1158H84G	1979-84	**700-115**
125	H1258H81A-H1258H82B	1981-82	**700-115**
140	H1400H79A-H1408H82D	1979-82	**700-115**

Part No. 700-230
O.E. No. 47-19453T

Part No. 725-155
O.E. No. 47-43026T11

PRECISION
Arizona • 1-800-977-1414
480-966-1550 • fax 480-966-1565
16441 N. 91St. Suite 105 Scottsdale, AZ 85260
Florida • 1-866-417-4072
941-238-0960 • fax 941-238-0965
1899 60th Place East, Bradenton, FL 34203
e-mail: info@wsmparts.com • www.wsmparts.com

Force Impellers
Application Chart

HP	Model	Year	Impeller		Service Kit
FORCE					
9.9-15	ALL	79-97	**700-140**		
10		74-78	**700-140**		
12		1979	**700-140**		
15		74-97	**700-140**		
20	ALL	79-82	**700-135**		
20/25	ALL	73-78	**700-140**		
25	E127700-E344999	96-98	**700-225**		
30	ALL	73-82	**700-135**		
35	ALL	76-87	**700-135**		
40/50	E093700-E369299	95-99	**700-225**		
70-75	ALL	91-98	**700-230**		
75	H0756H80F-H0758H84G	80-84	**700-115**		
75		99-UP	**700-155**		**725-155**
85	ALL	79-89	**700-115**		
85	D,F,G,H	89	**700-205**		
85	L-DRIVE-ALL	89	**700-205**		
90	H0906R83D-H0908V84B	83-84	**700-115**		
90	1991A,B,CD-1992C E000001-E039023	91-92	**700-205**		
90	L-DRIVE A, C	90-94	**700-205**		
90	E039024-E093699	92-94	**700-205**		
90	E093700-UP	95-97	**700-155**		
90	SPORT JET	95-97	**700-155**		
100	H1000H79A-H1008H84D	79-84	**700-115**		
105	H1058H82G-H1058V83H	82-83	**700-115**		
115	ALL	79-84	**700-115**		
120	ALL	90	**700-20**		
120	L-DRIVE-ALL	90	**700-205**		
120	SPORT JET	95-97	**700-155**		
125	A,B,C	81-89	**700-115**		
125	D,E	89	**700-205**		
140	H1400H79A-H1409H79B	79-84	**700-115**		
150	ALL	89-UP	**700-205**		

New York • 1-800-222-3375
631-244-8060 • fax 631-244-0556
61 Floyd Run, Bohemia, NY 11716
Puerto Rico
787-832-2499 • fax 787-832-2939
234 Balboa St., Mayaquez, Puerto Rico 00681-2605
e-mail: info@wsmparts.com • www.wsmparts.com

Thermostats

Part No. 775-110
143 degree Stainless Steel
O.E. No. F75692

Part No. 775-125
1" diameter / 143 degree
O.E. No. F75692

Tilt Tubes Parts

Tilt Tube Bushing	Inside Diameter	Length
986-200	7/8"	1"

Washer	
986-300	7/8"

Cable Grease Nut	Pitch Thread
986-500	1" x 14

Built in Grease seal with easy steer nuts, it lubricates and seals out moisture and salt water.

986-505	7/8" x 14

Tilt Tube Reamer	Shank Dia.
986-600	3/8"

Specialy ground OD to accommodate most Tilt Tubes. Made of high speed tool steel.

Tilt Tube Cleaning Brush
986-605

Part No. 555-01K
Drain Plug Gasket Kit

PRECISION
Arizona • 1-800-977-1414
480-966-1550 • fax 480-966-1565
16441 N. 91St. Suite 105 Scottsdale, AZ 85260
Florida • 1-866-417-4072
941-238-0960 • fax 941-238-0965
1899 60th Place East, Bradenton, FL 34203
e-mail: info@wsmparts.com • www.wsmparts.com

Protorque Trim Motors

Part No. PH200-T031

Chrysler O.E. No. 449541-1 & 4555541
Force O.E. No. F17563, F17556, FK654541
3.5" Reservoir Base
3 Wire W/ O-Ring

Part No. PH200-T033

O.E. No. 824051
Fits: 90 hp 95-97, 120 hp 95-97
With Reservoir, 3 Wire Single Ram System.

Part No. PH200-WH01

Wiring Harness Kit with two relays
Converts older 3 wire systems to 2 wire
O.E. No. 84-826802A-1

Part No. PH200-T002

O.E. No. 827675A1
Fits 25-50 hp Late Stlye With 2 wire connection & Flat Blade Shaft

Part No. PH200-T038

O.E. No. 820545, F694541-1 & F694541-2
Fits Late Model Force with 2 wire connection.

Part No. PH200-T003

O.E. No. 818903A1, 819762A4-A7, 819479A1, 819480A1, 81977A8-A9, 822870A1, 830250A3-T3, 832021A1-T4-A2-T2, 855654A1-T2, 19217A1-A5

Fits: 40 hp 92-94, 50 hp 91-94, 70 hp 91-95, 75 hp 96-99, 90hp 91-94, 120 hp 90-94, 150 hp 89-94
Force 2 Ram Systems

Trim Valve Body
Part No. PH200-VB01

O.E. No. F694541
Fits on 330-100 & 330-417 Trim Motors

Trim Relay
Part No. PH360-0001

O.E. No. 87-19761
Fits: 12V 40A Trim/ Tilt

Trim Relay
Part No. PH360-0002

O.E. No. 882751A1
Fits: 12V 40A Trim/ Tilt

New York • 1-800-222-3375
631-244-8060 • fax 631-244-0556
61 Floyd Run, Bohemia, NY 11716
Puerto Rico
787-832-2499 • fax 787-832-2939
234 Balboa St., Mayaquez, Puerto Rico 00681-2605
e-mail: info@wsmparts.com • www.wsmparts.com

Protorque Starters

Starter Motor (10 Tooth)
O.E. No.50-803900T, 50-F514955

Fits: 25 hp 83-84, 25 hp 89
30 hp 79, 35 hp 76-78, 86-91

Part No. PH130-0069

Replacement Starter Drive
Part No. PH175-0020

Commutator End
Part No. PH185-0005

Starter Motor (11 Tooth)
O.E. No.57-5955, 20-1955,
50-F575955

Fits: 35-50 hp 66-92

Part No. PH130-0068

Replacement Starter Drive
Part No. PH175-0001

Commutator End
Part No. PH185-0005

Starter Motor (13 Tooth)
O.E. No.50-819271, 50-820193A1
Serial # OE000001-OE369299

Fits: 40-50 hp 92-94

Part No. PH130-0025

Replacement Starter Drive
Part No. PH175-0009

Commutator End
Part No. PH185-0002

PRECISION
Arizona • 1-800-977-1414
480-966-1550 • fax 480-966-1565
16441 N. 91St. Suite 105 Scottsdale, AZ 85260
Florida • 1-866-417-4072
941-238-0960 • fax 941-238-0965
1899 60th Place East, Bradenton, FL 34203
e-mail: info@wsmparts.com • www.wsmparts.com

Protorque Starters

Starter Motor (13 Tooth)
O.E. No.50-820193

Fits: 40-50 hp 95 & Up

Part No. PH130-0022

Replacement Starter Drive
Part No. PH175-0009

Commutator End
Part No. PH185-0003

Starter Motor (9 Tooth)
O.E. No. 50-819968, -1, -2

Fits: 90-120 hp 92-Up Sport Jet

Part No. PH130-0009

Replacement Starter Drive
Part No. PH175-0005

Commutator End
Part No. PH185-0003

Starter Motor (9 Tooth)
O.E. No. 480955, 490955, 50-819085, 61-6955

Fits: 70Hp 91-95 / OE000001-OE138599
75hp from 96-98 / OE138600-OE318771
90hp 91-98 / OE138600-OE318771
120hp 90-94 / OE000001-OE093699
150hp 89-94 / OE000001-OE093699

Part No. PH130-0047

Replacement Starter Drive
Part No. PH175-0013

Commutator End
Part No. PH185-0003

New York • 1-800-222-3375
631-244-8060 • fax 631-244-0556
61 Floyd Run, Bohemia, NY 11716

Puerto Rico
787-832-2499 • fax 787-832-2939
234 Balboa St., Mayaquez, Puerto Rico 00681-2605

e-mail: info@wsmparts.com • www.wsmparts.com

Protorque Starter Solenoids

Part No. PH375-0030
O.E. No. F177917
Fits: 9.9 hp Serial #3299 & below
Fits: 35-150 hp

Part No. PH375-0052
O.E. No. 89-803822T, 89-F460917-1, F460917-1, 89-817109A3
Fits: Early Model 35-150 hp

Part No. PH375-0037
O.E. No. 89-817109A2
Fits 75 hp 3cyl.
Serial # G127500 & up

WSM Spark Plug Wires

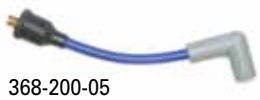

368-200-05

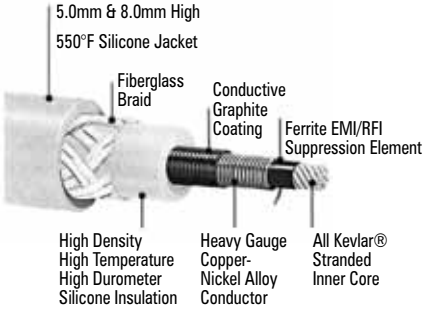

Part No.	O.E. No.	Description	Unit
368-200-05		5 inch Spark Plug Wire	EA
368-200-07		7 inch Spark Plug Wire	EA
368-200-09	84-813715A 1	9 inch Spark Plug Wire	EA

Spark Plug Wire Rolls

BULK SPARK PLUG WIRE ROLL

Part No.	O.E. No.	Description	Unit
368-400-25		8mm Spark Plug Wire 25 Ft. Roll	EA

WSM Spark Plug Boots

369-100

369-120

369-110

SPARK PLUG BOOTS

Part No.	O.E. No.	Description	Unit
369-100		Inline Spark Plug Boot, Black	EA
369-110		90° Spark Plug Boot, Black	EA
369-120		90° Spark Plug Boot, Black	EA

SPARK PLUG TERMINALS

370-100		Plug Wire Terminal, Brass (10 Pack)	PK
370-110		Plug Wire Terminal, Stainless (10 Pack)	PK

370-100

370-110

PRECISION
Arizona • 1-800-977-1414
480-966-1550 • fax 480-966-1565
16441 N. 91St. Suite 105 Scottsdale, AZ 85260
Florida • 1-866-417-4072
941-238-0960 • fax 941-238-0965
1899 60th Place East, Bradenton, FL 34203
e-mail: info@wsmparts.com • www.wsmparts.com

Protorque Starters

Starter
Part No. **PH130-0054**
O.E. No. 31200-ZV5-003, 31200-ZV5-013
35, 40, 50 HP

Starter
Part No. **PH130-0064**
O.E. No. 31200-ZWI-004
115-130 HP 4-Stroke,
1997-Up 13 Tooth

Starter
Part No. **PH130-0065**
O.E. No. 31200-ZW5-003
114-130 HP 4-Stroke, 2002-Up 13 Tooth

Starter
Part No. **PH130-0070**
O.E. No. 31200-ZY3-003
225 HP 4-Stroke, 2002-Up 9 Tooth

Alternator

Alternator
Part No. **PH300-0049**
O.E. No. 31630-ZY3-003
Fits: 200-225 Hp 2002-2010

Protorque Trim Motors

Trim Harness with Relays
Part No. **PH200-WH01**

Trim Motor
Part No. **PH200-T021**
O.E. No 36120-ZV5-821
35-50HP 1992-UP

Trim Motor
Part No. **PH200-T046**
Fits 40 & 50 H.P. Replaces
36120-ZV5-822
O/E Motor Pictured, Protorque Motor does not include the plastic connector. Install O/E connector onto Protorque Wire Harness.

New York • 1-800-222-3375
631-244-8060 • fax 631-244-0556
61 Floyd Run, Bohemia, NY 11716
Puerto Rico
787-832-2499 • fax 787-832-2939
234 Balboa St., Mayaquez, Puerto Rico 00681-2605
e-mail: info@wsmparts.com • www.wsmparts.com

Spark Plug Wires

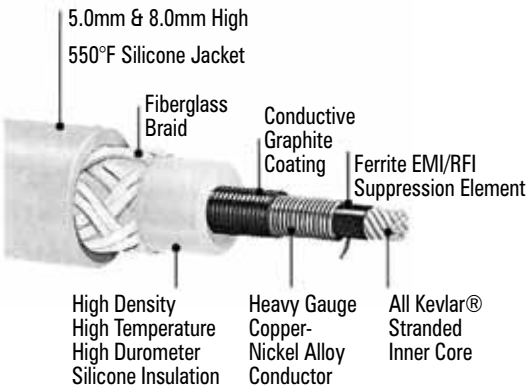

Part No.	
368-100-04	4" wire
368-100-06	6" wire
368-100-09	9" wire
368-100-12	12" wire

25ft Plug Wire Kit
Part No. **368-400-25**

Part No. **369-110**
90° Spark Plug Boot, Black

Plug Wire Terminal, Brass (10 Pack)
Part No. **370-100**

Plug Wire Terminal, Stainless (10 Pack))
Part No. **370-110**

Oil Filters

OIL FILTER
Part No. **615-120**
Replaces 15400-POH-30, 15400-POH-305PI
75 HP & UP, BF75, BF90, AT, AW, AX, AY
Series # 14ZW00E1M, BF115,BF130,AX, AY, A1
Series# 14ZW50E1M

OIL FILTER
Part No. **006-563**
O.E. No. 15400-PFB-014
Fits: BF/BFP 8-15, BF 20, D3, D4, BF25A, BF30A, BF35AM, BF40A, BF45AM, BF50,

OIL FILTER
Part No. **615-110**
O.E. No. 15400-PFB-014

PRECISION
Arizona • 1-800-977-1414
480-966-1550 • fax 480-966-1565
16441 N. 91St. Suite 105 Scottsdale, AZ 85260
Florida • 1-866-417-4072
941-238-0960 • fax 941-238-0965
1899 60th Place East, Bradenton, FL 34203
e-mail: info@wsmparts.com • www.wsmparts.com

WSM Fuel/Water Separator Filter

FUEL / WATER FILTER
Part No. **600-454**
O.E. No. 17670-ZW1-801AH

FUEL / WATER FILTER KIT
Part No. **600-441K**
21 Micron, 1/4 NPT

FUEL / WATER FILTER KIT
Part No. **600-456K**
10 Micron, 1/4 NPT

For More Fuel Waters Separators See Universal Section

Fuel Filters

Complete Fuel Filter
Part No. **600-315**
Replaces: 16900-SR3-004
For BF115, BF130, AX, AY, A1
Series#14ZW50E1M

Complete Fuel Filter
Part No. **600-316**
Replaces: 16900-SA5-004
For BF35/45AM, BF4050A, AW, AX
Series #14ZV50M:BF75,BF90,AT, AW,AX, AY, Series#14ZW00E1M

New York • 1-800-222-3375
631-244-8060 • fax 631-244-0556
61 Floyd Run, Bohemia, NY 11716
Puerto Rico
787-832-2499 • fax 787-832-2939
234 Balboa St., Mayaquez, Puerto Rico 00681-2605
e-mail: info@wsmparts.com • www.wsmparts.com

Impellers

Part No. **700-155**
O.E. No. 19210-ZW1-003

Part No. **700-175**
O.E. No. 19210-ZV5-003

Part No. **700-180**
O.E. No. 19210-ZV7-003

Application Chart

HP	OEM	Year	Impeller
BF20	19210-ZV7-003		**700-180**
BF25/30	19210-ZV7-003		**700-180**
BF35/40/45/50	19210-ZV5-003	(97 & UP)	**700-175**
BF75/90	19210-ZW1-303	('96-98)	**700-155**

Thermostats

Part No. **775-200**
Replaces 19300-ZY6-003
19300-881-761
Fits: BF5-150HP
2004-UP BF75-BF90
2007-UP

Part No. **775-205**
Replaces 19300-ZY3-023
19300-881-741 to 775-205
Fits: 115-225hp

Part No.	Description	O.E. No.
555-01K	Drain Plug Gasket Assortment Kit Fits: Mercury, J/E, Yamaha, Suzuki, Nissan/Tohatsu, Volvo	

Note: Kits Included 50 Pieces In Each Kit

PRECISION
Arizona • 1-800-977-1414
480-966-1550 • fax 480-966-1565
16441 N. 91St. Suite 105 Scottsdale, AZ 85260
Florida • 1-866-417-4072
941-238-0960 • fax 941-238-0965
1899 60th Place East, Bradenton, FL 34203
e-mail: info@wsmparts.com • www.wsmparts.com

Re-Build Kits

One convenient part number gives you everything you need.

WSM rebuild kits come complete with all parts needed for your engine

Kits include:

- WSM pistons complete with Japanese rings, pins, and clips
- Highest quality gaskets available
- Crank bearings, rod bearings, and rod bolts

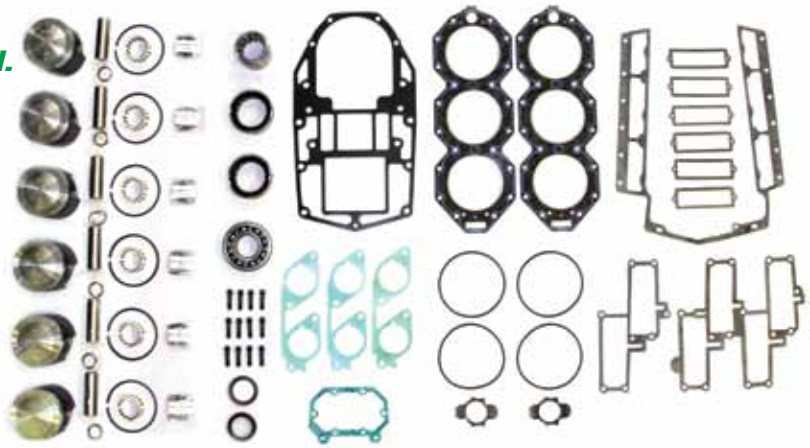

Horse Power	Year	Kit No.	Bore Size
18/20/25 HP	1981-99	**100-103-10**	STD.
28-35 HP	1981-99	**100-103-11**	.010
3″ Bore 2 Cyl.		**100-103-12**	.020
		100-103-13	.030
		100-103-14	.040

Kit Includes:

Description	Part No.	Qty.
Piston Kit	**100-103** series	2
Gasket Kit	**500-120**	1
Upper Main Bearings	**010-290**	1
Center Main Bearings	**010-280**	1
Lower Main Bearings	**010-240**	1
Upper Rod Bearings	**010-140-01**	2
Lower Rod Bearings	**010-150-01**	2
Rod Bolts	**805-106**	4

Horse Power	Year	Kit No.	Bore Size
2 Cyl. E-Tec		**100-126-10**	STD.
		100-126-12	.020
		100-126-13	.030
		100-126-14	.040

Kit Includes:

Description	Part No.	Qty.
Piston Kit	**100-126** Series	2
Gasket Set	**500-126**	1
Upper Main Bearings	**010-289**	1
Center Main Bearings	**010-282**	1
Lower Main Bearings	**010-222-01**	1
Upper Rod Bearings	**010-140**	2
Lower Rod Bearings	**010-156**	2
Rod Bolts	**805-106**	4

Horse Power	Year	Kit No.	Bore Size
40-50 HP	1981-1997	**100-100-10**	STD.
3.187″ Bore 2 Cyl.		**100-100-11**	.010
		100-100-12	.020
		100-100-13	.030
		100-100-14	.040

Kit Includes:

Description	Part No.	Qty.
Piston Kit	**100-100** series	2
Gasket Kit	**500-125**	1
Upper Main Bearings	**010-292**	1
Center Main Bearings	**010-281**	1
Lower Main Bearings	**010-221-01**	1
Upper Rod Bearings	**010-140**	2
Lower Rod Bearings	**010-150-01**	2
Rod Bolts	**805-106**	4

Horse Power	Year	Kit No.	Bore Size
60/75HP	1976-88	**100-104-10**	STD.
3″ Bore		**100-104-11**	.010
		100-104-12	.020
		100-104-13	.030
		100-104-14	.040

Kit Includes:

Description	Part No.	Qty.
Piston Kit	**100-104** series	3
Gasket Kit	**500-135**	1
Upper Main Bearings	**010-292**	1
Center Main Bearings	**010-281**	2
Lower Main Bearings	**010-221-01**	1
Upper Rod Bearings	**010-140**	3
Lower Rod Bearings	**010-150-01**	3
Rod Bolts	**805-106**	6

New York • 1-800-222-3375
631-244-8060 • fax 631-244-0556
61 Floyd Run, Bohemia, NY 11716
Puerto Rico
787-832-2499 • fax 787-832-2939
234 Balboa St., Mayaquez, Puerto Rico 00681-2605
e-mail: info@wsmparts.com • www.wsmparts.com

Re-Build Kits

One convenient part number gives you everything you need.

WSM rebuild kits come complete with all parts needed for your engine

Kits include:

- WSM pistons complete with Japanese rings, pins, and clips
- Highest quality gaskets available
- Crank bearings, rod bearings, and rod bolts

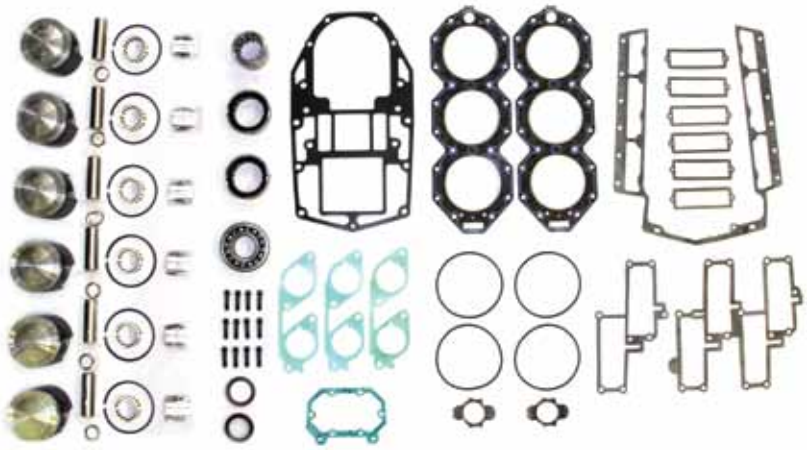

Horse Power	Year	Kit No.	Bore Size
60 HP & 70 HP	89-Up	**100-120-10**	STD.
3.187″ Bore 3 cyl.		**100-120-11**	.010
50 HP 3 Cyl.	98-Up	**100-120-12**	.020
		100-120-13	.030
		100-120-14	.040

Kit Includes:

Description	Part No.	Qty.
Piston Kit	**100-120** series	3
Gasket Kit	**500-136**	1
Upper Main Bearings	**010-292**	1
Center Main Bearings	**010-281**	2
Lower Main Bearings	**010-221-01**	1
Upper Rod Bearings	**010-140**	3
Lower Rod Bearings	**010-150-01**	3
Rod Bolts	**805-106**	6

Horse Power	Year	Kit No.	Bore Size
V4 Crossflow	1977-Up	**100-110-10**	STD.
3.500" Bore		**100-110-11**	.010
4 Cyl.		**100-110-12**	.020
		100-110-13	.030
		100-110-14	.040

Kit Includes:

Description	Part No.	Qty.
Piston Kit	**100-110** series	4
Gasket Kit	**500-130**	1
Upper Main Bearings	**010-293**	1
Center Main Bearings	**010-282**	1
Lower Main Bearings	**010-206-01**	1
Upper Rod Bearings	**010-140**	4
Lower Rod Bearings	**010-156**	4
Rod Bolts	**805-106**	8

Horse Power	Year	Kit No.	Bore Size
3 Cyl. E-Tec		**100-126-20**	STD.
		100-126-22	.020
		100-126-23	.030
		100-126-24	.040

Kit Includes:

Description	Part No.	Qty.
Piston Kit	**100-126** Series	3
Gasket Set	**500-137**	1
Upper Main Bearings	**010-289**	1
Center Main Bearings	**010-282**	2
Lower Main Bearings	**010-222-01**	1
Upper Rod Bearings	**010-140**	3
Lower Rod Bearings	**010-156**	3
Rod Bolts	**805-106**	6

Horse Power	Year	Kit No.	Bore Size
120-140 HP	1985-1987	**100-115-10**	STD.
Looper 4 Cyl.		**100-115-11**	.010
Small Bore 3.500		**100-115-12**	.020
		100-115-13	.030
		100-115-14	.040

Kit Includes:

Description	Part No.	Qty.
Piston Kit	**100-115** (PS)	4
Gasket Kit	**500-131**	1
Upper Main Bearings	**010-293**	1
Center Main Bearings	**010-282**	1
Lower Main Bearings	**010-207-05**	1
Upper Rod Bearings	**010-141**	4
Lower Rod Bearings	**010-157**	4
Rod Bolts	**805-107**	8

PRECISION
Arizona • 1-800-977-1414
480-966-1550 • fax 480-966-1565
16441 N. 91St. Suite 105 Scottsdale, AZ 85260
Florida • 1-866-417-4072
941-238-0960 • fax 941-238-0965
1899 60th Place East, Bradenton, FL 34203
e-mail: info@wsmparts.com • www.wsmparts.com

Re-Build Kits

One convenient part number gives you everything you need.

WSM rebuild kits come complete with all parts needed for your engine

Kits include:
- WSM pistons complete with Japanese rings, pins, and clips
- Highest quality gaskets available
- Crank bearings, rod bearings, and rod bolts

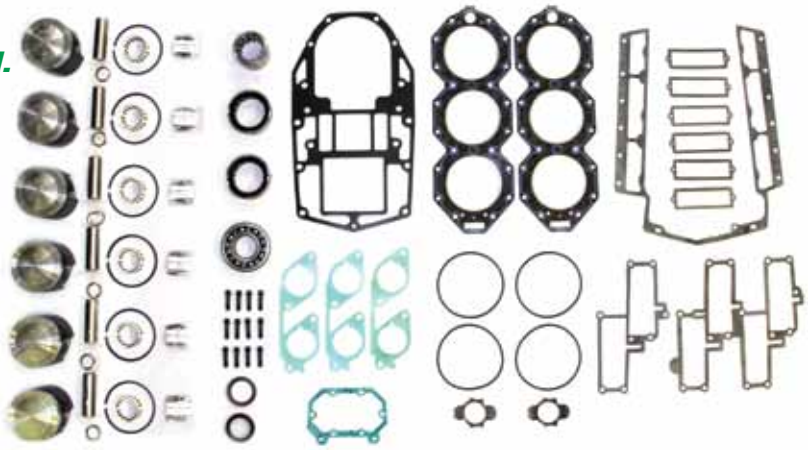

Horse Power	Year	Kit No.	Bore Size
120-140 HP	1988-1995	**100-135-10**	STD.
Looper 4 Cyl.		**100-135-11**	.010
Big Bore 3.685		**100-135-12**	.020
		100-135-13	.030
		100-135-14	.040

Kit Includes:

Description	Part No.	Qty.
Piston Kit	**100-135** (PS)	4
Gasket Kit	**500-132**	1
Upper Main Bearings	**010-293**	1
Center Main Bearings	**010-282**	1
Lower Main Bearings	**010-207-05**	1
Upper Rod Bearings	**010-141**	4
Lower Rod Bearings	**010-157**	4
Rod Bolts	**805-107**	8

Horse Power	Year	Kit No.	Bore Size
V4 60 degree		**100-130-10**	STD.
Carbureted		**100-130-11**	.010
		100-130-12	.020
		100-130-13	.030
		100-130-14	.040

Kit Includes:

Description	Part No.	Qty.
Piston Kit	**100-130** (PS)	4
Gasket Kit	**500-133**	1
Upper Main Bearings	**010-282**	1
Center Main Bearings	**010-282**	1
Lower Main Bearings	**010-222-01**	1
Upper Rod Bearings	**010-140**	4
Lower Rod Bearings	**010-156**	4
Rod Bolts	**805-106**	8

Horse Power	Year	Kit No.	Bore Size
90/115 HP	99 & Up	**100-133-10**	STD.
FICHT		**100-133-12**	.020
4 Cyl.		**100-133-13**	.030
		100-133-14	.040

Kit Includes:

Description	Part No.	Qty.
Piston Kit	**100-133** (P/S)	4
Gasket Kit	**500-134**	1
Upper Main Bearings	**010-282**	1
Center Main Bearings	**010-282**	1
Lower Main Bearings	**010-222-01**	1
Upper Rod Bearings	**010-140**	4
Lower Rod Bearings	**010-156**	4
Rod Bolts	**805-106**	8

Horse Power	Year	Kit No.	Bore Size
115-130Hp		**100-131-10**	STD.
V4 E-Tec		**100-131-12**	.020
year 2007 & up		**100-131-13**	.030
		100-131-14	.040

Kit Includes:

Description	Part No.	Qty.
Piston Kit	**100-131** Series	4
Gasket Set	**500-138**	1
Upper Main Bearings	**010-282**	1
Center Main Bearings	**010-282**	1
Lower Main Bearings	**010-222-01**	1
Upper Rod Bearings	**010-140**	2
Lower Rod Bearings	**010-156**	2
Rod Bolts	**805-106**	4

New York • 1-800-222-3375
631-244-8060 • fax 631-244-0556
61 Floyd Run, Bohemia, NY 11716

Puerto Rico
787-832-2499 • fax 787-832-2939
234 Balboa St., Mayaquez, Puerto Rico 00681-2605

e-mail: info@wsmparts.com • www.wsmparts.com

Re-Build Kits

One convenient part number gives you everything you need.

WSM rebuild kits come complete with all parts needed for your engine

Kits include:

- WSM pistons complete with Japanese rings, pins, and clips
- Highest quality gaskets available
- Crank bearings, rod bearings, and rod bolts

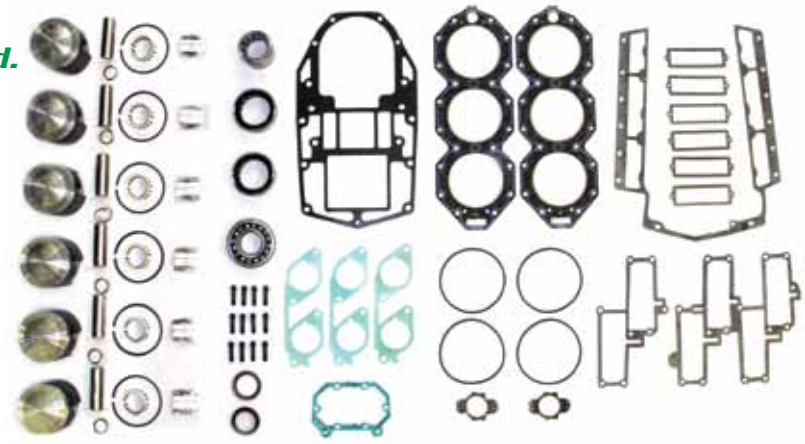

Horse Power	Year	Kit No.	Bore Size
150-200 HP	1976-92	**100-110-30**	STD.
Crossflow		**100-110-31**	.010
3.5″ Bore		**100-110-32**	.020
		100-110-33	.030
		100-110-34	.040

Kit Includes:

Description	Part No.	Qty.
Piston Kit	**100-110** series	6
Gasket Kit	**500-140**	1
Upper Main Bearings	**010-293**	1
Center Main Bearings	**010-282**	2
Lower Main Bearings	**010-206-01**	1
Upper Rod Bearings	**010-140**	6
Lower Rod Bearings	**010-156**	6
Rod Bolts	**805-106**	12

Horse Power	Year	Kit No.	Bore Size
175 & 235 HP		**100-140-10**	STD.
Big Bore Crossflows		**100-140-11**	.010
3.625" Bore		**100-140-12**	.020
		100-140-13	.030
		100-140-14	.040

Kit Includes:

Description	Part No.	Qty.
Piston Kit	**100-140** series	6
Gasket Kit	**500-141**	1
Upper Main Bearings	**010-293**	1
Center Main Bearings	**010-282**	2
Lower Main Bearings	**010-206-01**	1
Upper Rod Bearings	**010-140**	6
Lower Rod Bearings	**010-156**	6
Rod Bolts	**805-106**	12

Horse Power	Year	Kit No.	Bore Size
200-225 HP	1985-87	**100-115-20**	STD.
Looper		**100-115-21**	.010
3.5″ Small Bore		**100-115-22**	.020
		100-115-23	.030
		100-155-24	.040

Kit Includes:

Description	Part No.	Qty.
Piston Kit	**100-115** (PS)	6
Gasket Kit	**500-144**	1
Upper Main Bearings	**010-293**	1
Center Main Bearings	**010-282**	2
Lower Main Bearings	**010-207-05**	1
Upper Rod Bearings	**010-141**	6
Lower Rod Bearings	**010-157**	6
Rod Bolts	**805-107**	12

Horse Power	Year	Kit No.	Bore Size
200-225 HP	1988-1992	**100-135-20**	STD.
Looper		**100-135-21**	.010
3.685″ Big Bore		**100-135-22**	.020
		100-135-23	.030
		100-135-24	.040

Kit Includes:

Description	Part No.	Qty.
Piston Kit	**100-135** (PS)	6
Gasket Kit	**500-145**	1
Upper Main Bearings	**010-293**	1
Center Main Bearings	**010-282**	2
Lower Main Bearings	**010-207-05**	1
Upper Rod Bearings	**010-141**	6
Lower Rod Bearings	**010-157**	6
Rod Bolts	**805-107**	12

PRECISION
Arizona • 1-800-977-1414
480-966-1550 • fax 480-966-1565
16441 N. 91St. Suite 105 Scottsdale, AZ 85260
Florida • 1-866-417-4072
941-238-0960 • fax 941-238-0965
1899 60th Place East, Bradenton, FL 34203
e-mail: info@wsmparts.com • www.wsmparts.com

Re-Build Kits

One convenient part number gives you everything you need.

WSM rebuild kits come complete with all parts needed for your engine

Kits include:

- WSM pistons complete with Japanese rings, pins, and clips
- Highest quality gaskets available
- Crank bearings, rod bearings, and rod bolts

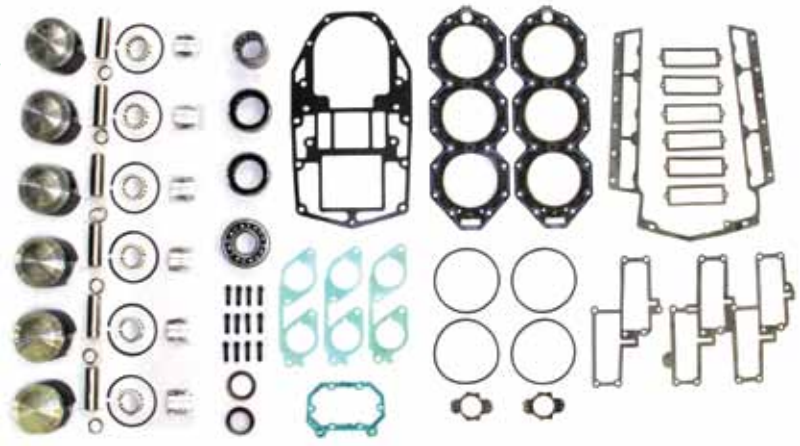

Horse Power	Year	Kit No.	Bore Size
200-225 Looper	1993 & Up	**100-125-10**	STD.
3.685" Bore		**100-125-11**	.010
6 Cyl.		**100-125-12**	.020
		100-125-13	.030
		100-125-14	.040

Kit Includes:

Description	Part No.	Qty.
Piston Kit	**100-125** (PS)	6
Gasket Kit	**500-146**	1
Upper Main Bearings	**010-293**	1
Center Main Bearings	**010-282**	2
Lower Main Bearings	**010-207-05**	1
Upper Rod Bearings	**010-141**	6
Lower Rod Bearings	**010-157**	6
Rod Bolts	**805-107**	12

Horse Power	Year	Kit No.	Bore Size
150-175 HP		**100-130-20**	STD.
60 Degree		**100-130-21**	.010
Carbureted		**100-130-22**	.020
6 Cyl.		**100-130-23**	.030
		100-130-24	.040

Kit Includes:

Description	Part No.	Qty.
Piston Kit	**100-130** (PS)	6
Gasket Kit	**500-147**	1
Upper Main Bearings	**010-282**	1
Center Main Bearings	**010-282**	2
Lower Main Bearings	**010-222-01**	1
Upper Rod Bearings	**010-140**	6
Lower Rod Bearings	**010-156**	6
Rod Bolts	**805-106**	12

Horse Power	Year	Kit No.	Bore Size
150/175 HP FICHT		**100-133-20**	STD.
60 Degree		**100-133-22**	.020
		100-133-23	.030
		100-133-24	.040

Kit Includes:

Description	Part No.	Qty.
Piston Kit	**100-133** (P/S)	6
Gasket Kit	**500-150**	1
Upper Main Bearings	**010-282**	1
Center Main Bearings	**010-282**	2
Lower Main Bearings	**010-222-01**	1
Upper Rod Bearings	**010-140**	6
Lower Rod Bearings	**010-156**	6
Rod Bolts	**805-106**	12

Horse Power	Year	Kit No.	Bore Size
150-175 HP V6 E-Tec		**100-131-20**	STD.
		100-131-22	.020
		100-131-23	.030
		100-131-24	.040

Kit Includes:

Description	Part No.	Qty.
Piston Kit	**100-131** Series	6
Gasket Set	**500-153**	1
Upper Main Bearings	**010-282**	1
Center Main Bearings	**010-282**	2
Lower Main Bearings	**010-222-01**	1
Upper Rod Bearings	**010-140**	6
Lower Rod Bearings	**010-156**	6
Rod Bolts	**805-106**	12

New York • 1-800-222-3375
631-244-8060 • fax 631-244-0556
61 Floyd Run, Bohemia, NY 11716
Puerto Rico
787-832-2499 • fax 787-832-2939
234 Balboa St., Mayaquez, Puerto Rico 00681-2605
e-mail: info@wsmparts.com • www.wsmparts.com

Re-Build Kits

One convenient part number gives you everything you need.

WSM rebuild kits come complete with all parts needed for your engine

Kits include:

- WSM pistons complete with Japanese rings, pins, and clips
- Highest quality gaskets available
- Crank bearings, rod bearings, and rod bolts

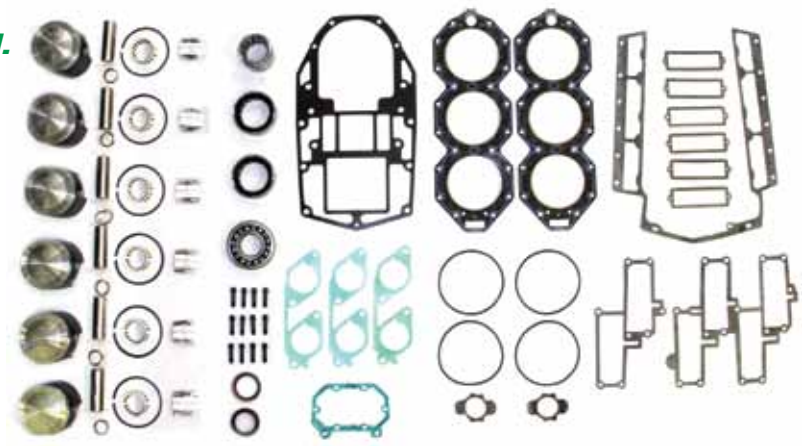

Horse Power	Year	Kit No.	Bore Size
3.3 Liter Ficht	2000-Up	**100-134-10**	STD.
3.854 Bore		**100-134-12**	.020
		100-134-13	.030

Kit Includes:

Description	Part No.	Qty.
Piston Kit	**100-134** (PS)	6
Gasket Kit	**500-146-02**	1
Upper Main Bearings	**010-293**	1
Center Main Bearings	**010-282**	2
Lower Main Bearings	**010-207-05**	1
Upper Rod Bearings	**010-141**	6
Lower Rod Bearings	**010-157**	6
Rod Bolts	**805-110**	12

Horse Power	Year	Kit No.	Bore Size
3.3 Liter E-Tec		**100-136-10**	STD.
3.854 Bore		**100-136-12**	.020
		100-136-13	.030

Kit Includes:

Description	Part No.	Qty.
Piston Kit	**100-136** (PS)	6
Gasket Kit	**500-146-03**	1
Upper Main Bearings	**010-293**	1
Center Main Bearings	**010-282**	2
Lower Main Bearings	**010-207-05**	1
Upper Rod Bearings	**010-141**	6
Lower Rod Bearings	**010-157**	6
Rod Bolts	**805-110**	12

Horse Power	Year	Kit No.	Bore Size
3.4 Liter E-Tec		**100-13710**	STD.
3.854 Bore		**100-137-12**	.020
		100-137-13	.030

Kit Includes:

Description	Part No.	Qty.
Piston Kit	**100-137** (PS)	6
Gasket Kit	**500-146-04**	1
Upper Main Bearings	**010-293**	1
Center Main Bearings	**010-282**	2
Lower Main Bearings	**010-207-05**	1
Upper Rod Bearings	**010-141**	6
Lower Rod Bearings	**010-157**	6
Rod Bolts	**805-110**	12

PRECISION
Arizona • 1-800-977-1414
480-966-1550 • fax 480-966-1565
16441 N. 91St. Suite 105 Scottsdale, AZ 85260
Florida • 1-866-417-4072
941-238-0960 • fax 941-238-0965
1899 60th Place East, Bradenton, FL 34203
e-mail: info@wsmparts.com • www.wsmparts.com

WSM Pistons

Picture Gallery

2.188"
9.9-15 HP

Piston: 100-101K
O.E. No.: 387660

Ring Set: 200-101
O.E. No.: 386279

Wrist Pin: 300-101
O.E. No.: 325296

Clips: 400-14

3.187" 3 CYL. LOOP CHARGE

Piston: **100-120K**
O.E. No.: 436976

Ring Set: 200-100
O.E. No.: 436972

Wrist Pin: 300-100

Clips: 400-19
O.E. No.: 53-857196

2.375"
9.9-15 HP

Piston: **100-102K**
O.E. No.: 0436901

Ring Set: 200-102
O.E. No.: 435218

Wrist Pin: 300-102

Clips: 400-14

3.5" LOOP CHARGE

Piston: **100-115PK** (Port)
O.E. No.: 393566

Piston: **100-115SK** (Starboard)
O.E. No.: 391481

Ring Set: 200-110
O.E. No.: 394930

Wrist Pin: 300-115

Clips: 400-24

3.00" LOOP CHARGE

Piston: **100-104K**
O.E. No.: 0387284

Ring Set: 200-103
O.E. No.: 396377

Wrist Pin: 300-104

Clips: 400-19
O.E. No.: 53-857196

3.00" CROSS FLOW

Piston: **100-103K**
O.E. No.: 0392621

Ring Set: 200-103
O.E. No.: 396377

Ring Set: 200-103-30
O.E. No.: 396377

Wrist Pin: 300-103

Clips: 400-19
O.E. No.: 53-857196

New York • 1-800-222-3375
631-244-8060 • fax 631-244-0556
61 Floyd Run, Bohemia, NY 11716
Puerto Rico
787-832-2499 • fax 787-832-2939
234 Balboa St., Mayaquez, Puerto Rico 00681-2605
e-mail: info@wsmparts.com • www.wsmparts.com

WSM Pistons

Picture Gallery

3.187" 2 CYL. LOOP CHARGE

Piston: **100-100K**
O.E. No.: 435546

Ring Set: 200-100
O.E. No.: 436972

Ring Set: 200-100-30
O.E. No.: 391170

Wrist Pin: 300-100

Clips: 400-22

3.6" FICHT MOTOR

Piston: **100-133PK** (Port)
O.E. No.: 5000812
Piston: **100-133SK** (Starboard)
O.E. No.: 5000813

Ring Set: 200-133
O.E. No.: 5000819

Wrist Pin: 300-133

Clips: 400-19
O.E. No.: 53-857196

3.5" CROSS FLOW

Piston: **100-110K**
O.E. No.: 393271

Ring Set: 200-110
O.E. No.: 394930

Wrist Pin: 300-110

Clips: 400-19
O.E. No.: 53-857196

3.6" E-TEC 2 & 3 CYL.

Piston: **100-126K**
O.E. No.: 5006735

Ring Set: 200-133
O.E. No.: 5000819

Wrist Pin: 300-133
O.E. No.: 327861

Clips: 400-19
O.E. No.: 317831

3.6" LOOP CHARGE

Piston: **100-130PK** (Port)
O.E. No.:434503
Piston: **100-130SK** (Starboard)
O.E. No.:434503

Ring Set: 200-130
O.E. No.: 436353

Wrist Pin: 300-130

Clips: 400-19
O.E. No.: 53-857196

3.6" E-TEC V4/V6

Piston: **100-131PK**
O.E. No.: 5007541
Piston: **100-131SK** (Starboard)
O.E. No:5007037

Ring Set: 200-133
O.E. No.: 500819

Wrist Pin: 300-133

Clips: 400-19
O.E. No.: 53-857196

PRECISION
Arizona • 1-800-977-1414
480-966-1550 • fax 480-966-1565
16441 N. 91St. Suite 105 Scottsdale, AZ 85260
Florida • 1-866-417-4072
941-238-0960 • fax 941-238-0965
1899 60th Place East, Bradenton, FL 34203
e-mail: info@wsmparts.com • www.wsmparts.com

WSM Pistons

Picture Gallery

3.625" CROSS FLOW

Piston: **100-140K**
O.E. No.: 392455

Ring Set: 200-140
O.E. No.: 394930

Wrist Pin: 300-140

Clips: 400-19
O.E. No.: 53-857196

3.685" LOOP CHARGE V4 / V6

Piston: **100-135PK** (Port)
O.E. No.: 432072
Piston: **100-135SK** (Starboard)
O.E. No.: 432073

Ring Set: 200-135
O.E. No.: 431870

Wrist Pin: 300-125

Clips: 400-24

3.685" LOOP CHARGE

Piston: **100-125PK** (Port)
O.E. No.: 436860
Piston: **100-125SK** (Starboard)
O.E. No.: 436859

Ring Set: 200-125
O.E. No.: 436254

Wrist Pin: 300-125

Clips: 400-24

3.3 LITER 3.854" E-TEC V6

Piston: **100-136PK** (Port)
O.E. No.: 5006737
Piston: **100-136SK** (Starboard)
O.E. No.: 5006738

Ring Set: 200-134
O.E. No.: 5005046

Wrist Pin: 300-134
O.E. No.: 326764

Clips: 400-134
O.E. No.: 326705

3.854" 3.3 LITER FICHT

Piston: **100-134PK** (Port)
O.E. No.: 5006733
Piston: **100-134SK** (Starboard)
O.E. No.: 5006734

Ring Set: 200-134
O.E. No.: 5005046

Wrist Pin: 300-134

Clips: 400-134

3.4 LITER 3.854" E-TEC V6

Piston: **100-137PK** (Port)
O.E. No.: 5007697
Piston: **100-137SK** (Starboard)
O.E. No.: 5007697

Ring Set: 200-134
O.E. No.: 5005046

Wrist Pin: 300-134
O.E. No.: 326764

Clips: 400-134
O.E. No.: 326705

New York • 1-800-222-3375
631-244-8060 • fax 631-244-0556
61 Floyd Run, Bohemia, NY 11716
Puerto Rico
787-832-2499 • fax 787-832-2939
234 Balboa St., Mayaquez, Puerto Rico 00681-2605
e-mail: info@wsmparts.com • www.wsmparts.com

WSM Pistons

PISTON KIT APPLICATION CHART

Model	Cyl.	Bore	Part No.	Pos.	Size
9.9 -15 74-92	2	2.188	100-101K		Std.
			100-101-04K		.010
			100-101-05K		.020
			100-101-06K		.030
			100-101-07K		.040
9.9 -15 93 & Up	2	2.375	100-102K		Std.
			100-102-04K		.010
			100-102-05K		.020
			100-102-06K		.030
			100-102-07K		.040
18 Jet 95-99	2	3.00	100-103K		Std.
20 HP 81-83	2		100-103-04K		.010
20 HP 85-97	2		100-103-05K		.020
25 HP 81-05	2		100-103-06K		.030
28 HP 86-89	2		100-103-07K		.040
30 HP 84-05	2				
35 HP 81-84	2				
Cross flow					
28 JET 95-99	2	3.187	100-100K		Std.
35 HP 86-87	2		100-100-04K		.010
35 JET 90-99	2		100-100-05K		.020
40 HP 84-99	2		100-100-06K		.030
45 HP 85-91	2		100-100-07K		.040
48 HP 87-96	2				
50 HP 81-Up	2				
Loop charge					
40 to 60 HP ETEC	2	3.600	100-126K		Std.
			100-126-05K		.020
			100-126-06K		.030
			100-126-07K		.040
50 HP 95-99	3	3.187	100-120K		Std.
Loop charge			100-120-04K		.010
			100-120-05K		.020
			100-120-06K		.030
			100-120-07K		.040
55HP 80-94	2	3.187	100-100K		Std.
Com	2		100-100-04K		.010
60 HP 80-85			100-100-05K		.020
Loop charge			100-100-06K		.030
			100-100-07K		.040

RING SETS

Ring No.	Size
200-101	Std.
200-101-04	.010
200-101-05	.020
200-101-06	.030
200-101-07	.040
200-102	Std.
200-102-04	.010
200-102-05	.020
200-102-06	.030
200-102-07	.040
200-103	Std.
200-103-04	.010
200-103-05	.020
200-103-06	.030
200-103-07	.040
*200-100	Std.
*200-100-04	.010
*200-100-05	.020
*200-100-06	.030
*200-100-07	.040
200-133	Std.
200-133-05	.020
200-133-06	.030
200-133-07	.040
200-100	Std.
200-100-04	.010
200-100-05	.020
200-100-06	.030
200-100-07	.040
200-100	Std.
200-100-04	.010
200-100-05	.020
200-100-06	.030
200-100-07	.040

**Contains two 7 degree tapered rings. For ring sets with one 30 degree tapered ring and one rectangular ring order 200-100-30 Std, 200-100-35 .020, 200-100-36.*

PRECISION
Arizona • 1-800-977-1414
480-966-1550 • fax 480-966-1565
16441 N. 91St. Suite 105 Scottsdale, AZ 85260
Florida • 1-866-417-4072
941-238-0960 • fax 941-238-0965
1899 60th Place East, Bradenton, FL 34203
e-mail: info@wsmparts.com • www.wsmparts.com

WSM Pistons

PISTON KIT APPLICATION CHART / RING SETS

Model	Cyl.	Bore	Part No.	Pos.	Size	Ring No.	Size
60 HP 86-88	3	3.00	100-104K		Std.	200-103	Std.
			100-104-04K		.010	200-103-04	.010
			100-104-05K		.020	200-103-05	.020
			100-104-06K		.030	200-103-06	.030
			100-104-07K		.040	200-103-07	.040
60 HP 1989-2001	3	3.187	100-120K		Std.	*200-100	Std.
65 HP 1987-2001	3		100-120-04K		.010	*200-100-04	.010
			100-120-05K		.020	*200-100-05	.020
			100-120-06K		.030	*200-100-06	.030
			100-120-07K		.040	*200-100-07	.040
65 HP 84-86	3	3.00	100-104K		Std.	200-103	Std.
Commercial			100-104-04K		.010	200-103-04	.010
			100-104-05K		.020	200-103-05	.020
			100-104-06K		.030	200-103-06	.030
			100-104-07K		.040	200-103-07	.040
65 Jet 91-94	4	3.50	100-110K		Std.	200-110	Std.
			100-110-04K		.010	200-110-04	.010
			100-110-05K		.020	200-110-05	.020
			100-110-06K		.030	200-110-06	.030
			100-110-07K		.040	200-110-07	.040
70 HP 76-85	3	3.00	100-104K		Std.	200-103	Std.
			100-104-04K		.010	200-103-04	.010
			100-104-05K		.020	200-103-05	.020
			100-104-06K		.030	200-103-06	.030
			100-104-07K		.040	200-103-07	.040
70 HP 1996-2001	3	3.187	100-120K		Std.	*200-100	Std.
			100-120-04K		.010	*200-100-04	.010
			100-120-05K		.020	*200-100-05	.020
			100-120-06K		.030	*200-100-06	.030
			100-120-07K		.040	*200-100-07	.040
75 HP 76-88	3	3.00	100-104K		Std.	200-103	Std.
			100-104-04K		.010	200-103-04	.010
			100-104-05K		.020	200-103-05	.020
			100-104-06K		.030	200-103-06	.030
			100-104-07K		.040	200-103-07	.040
75 HP	4	3.60	100-133PK	Port	Std.	200-133	Std.
2000 - 04			100-133SK	Stbd.	Std.	200-133	Std.
Ficht Motor			100-133-05PK	Port	.020	200-133-05	.020
			100-133-05SK	Stbd.	.020	200-133-05	.020
			100-133-06PK	Port	.030	200-133-06	.030
			100-133-06SK	Stbd.	.030	200-133-06	.030
			100-133-07PK	Port	.040	200-133-07	.040
			100-133-07SK	Stbd.	.040	200-133-07	.040

**Contains two 7 degree tapered rings. For ring sets with one 30 degree tapered ring and one rectangular ring order 200-100-30 Std, 200-100-35 .020, 200-100-36.*

New York • 1-800-222-3375
631-244-8060 • fax 631-244-0556
61 Floyd Run, Bohemia, NY 11716
Puerto Rico
787-832-2499 • fax 787-832-2939
234 Balboa St., Mayaquez, Puerto Rico 00681-2605
e-mail: info@wsmparts.com • www.wsmparts.com

WSM Pistons

PISTON KIT APPLICATION CHART

Model	Cyl.	Bore	Part No.	Pos.	Size
75 HP E-Tec	3	3.60	**100-126K**		Std.
			100-126-05K		.020
			100-126-06K		.030
			100-126-07K		.040
80 Jet 91-97	4	3.50	**100-110K**		Std.
85 HP 79-80	4		**100-110-04K**		.010
88 HP 88-93	4		**100-110-05K**		.020
88 HP 96	4		**100-110-06K**		.030
90 HP 81-97	4		**100-110-07K**		.040
90 HP 95-99	4	3.60	**100-130PK**	Port	Std.
60 degree			**100-130SK**	Stbd.	Std.
			100-130-04PK	Port	.010
			100-130-04SK	Stbd.	.010
			100-130-05PK	Port	.020
			100-130-05SK	Stbd.	.020
			100-130-06PK	Port	.030
			100-130-06SK	Stbd.	.030
			100-130-07PK	Port	.040
			100-130-07SK	Stbd.	.040
90-115 HP	4	3.60	**100-133PK**	Port	Std.
99 &up			**100-133SK**	Stbd.	Std.
Ficht Motor			**100-133-05PK**	Port	.020
			100-133-05SK	Stbd.	.020
			100-133-06PK	Port	.030
			100-133-06SK	Stbd.	.030
			100-133-07PK	Port	.040
			100-133-07SK	Stbd.	.040
90 HP E-Tec	3	3.60	**100-126K**		Std.
			100-126-05K		.020
			100-126-06K		.030
			100-126-07K		.040
100 HP 79-80	4	3.50	**100-110K**		Std.
100 HP 90-93	4		**100-110-04K**		.010
			100-110-05K		.020
			100-110-06K		.030
			100-110-07K		.040
105 Jet 93-97	4	3.60	**100-130PK**	Port	Std.
60 degree			**100-130SK**	Stbd.	Std
			100-130-04PK	Port	.010
			100-130-04SK	Stbd.	.010
			100-130-05PK	Port	.020
			100-130-05SK	Stbd.	.020
			100-130-06PK	Port	.030
			100-130-06SK	Stbd.	.030
			100-130-07PK	Port	.040
			100-130-07SK	Stbd.	.040

RING SETS

Ring No.	Size
200-133	Std.
200-133-05	.020
200-133-06	.030
200-133-07	.040
200-110	Std.
200-110-04	.010
200-110-05	.020
200-110-06	.030
200-110-07	.040
200-130	Std.
200-130	Std.
200-130-04	.010
200-130-04	.010
200-130-05	.020
200-130-05	.020
200-130-06	.030
200-130-06	.030
200-130-07	.040
200-130-07	.040
200-133	Std.
200-133	Std.
200-133-05	.020
200-133-05	.020
200-133-06	.030
200-133-06	.030
200-133-07	.040
200-133-07	.040
200-133	Std.
200-133-05	.020
200-133-06	.030
200-133-07	.040
200-110	Std.
200-110-04	.010
200-110-05	.020
200-110-06	.030
200-110-07	.040
200-130	Std.
200-130	Std.
200-130-04	.010
200-130-04	.010
200-130-05	.020
200-130-05	.020
200-130-06	.030
200-130-06	.030
200-130-07	.040
200-130-07	.040

PRECISION
Arizona • 1-800-977-1414
480-966-1550 • fax 480-966-1565
16441 N. 91St. Suite 105 Scottsdale, AZ 85260
Florida • 1-866-417-4072
941-238-0960 • fax 941-238-0965
1899 60th Place East, Bradenton, FL 34203
e-mail: info@wsmparts.com • www.wsmparts.com

WSM Pistons

PISTON KIT APPLICATION CHART

Model	Cyl.	Bore	Part No.	Pos.	Size
110 HP 86-89	4	3.50	**100-110K**		Std.
115 HP 74-85	4		**100-110-04K**		.010
115 HP 90-97	4		**100-110-05K**		.020
			100-110-06K		.030
			100-110-07K		.040
115 HP 95-99	4	3.60	**100-130PK**	Port	Std.
60 degree			**100-130SK**	Stbd.	Std.
			100-130-04PK	Port	.010
			100-130-04SK	Stbd.	.010
			100-130-05PK	Port	.020
			100-130-05SK	Stbd.	.020
			100-130-06PK	Port	.030
			100-130-06SK	Stbd.	.030
			100-130-07PK	Port	.040
			100-130-07SK	Stbd.	.040
115 HP 99 & up	4	3.60	**100-133PK**	Port	Std.
Ficht Motor			**100-133SK**	Stbd.	Std.
			100-133-05PK	Port	.020
			100-133-05SK	Stbd.	.020
			100-133-06PK	Port	.030
			100-133-06SK	Stbd.	.030
			100-133-07PK	Port	.040
			100-133-07SK	Stbd.	.040
115 HP E-Tec	4	3.60	**100-131PK**	Port	Std.
			100-131SK	Stbd.	Std.
			100-131-05PK	Port	.020
			100-131-05SK	Stbd.	.020
			100-131-06PK	Port	.030
			100-131-06SK	Stbd.	.030
			100-131-07PK	Port	.040
			100-131-07SK	Stbd.	.040
120 HP 85-87	4	3.50	**100-115PK**	Port	Std.
90 degree Looper			**100-115SK**	Stbd.	Std.
Small Bore			**100-115-04PK**	Port	.010
			100-115-04SK	Stbd.	.010
			100-115-05PK	Port	.020
			100-115-05SK	Stbd.	.020
			100-115-06PK	Port	.030
			100-115-06SK	Stbd.	.030
			100-115-07PK	Port	.040
			100-115-07SK	Stbd.	.040

RING SETS

Ring No.	Size
200-110	Std.
200-110-04	.010
200-110-05	.020
200-110-06	.030
200-110-07	.040
200-130	Std.
200-130	Std.
200-130-04	.010
200-130-04	.010
200-130-05	.020
200-130-05	.020
200-130-06	.030
200-130-06	.030
200-130-07	.040
200-130-07	.040
200-133	Std.
200-133	Std.
200-133-05	.020
200-133-05	.020
200-133-06	.030
200-133-06	.030
200-133-07	.040
200-133-07	.040
200-133	Std.
200-133	Std.
200-133-05	.020
200-133-05	.020
200-133-06	.030
200-133-06	.030
200-133-07	.040
200-133-07	.040
200-110	Std.
200-110	Std.
200-110-04	.010
200-110-04	.010
200-110-05	.020
200-110-05	.020
200-110-06	.030
200-110-06	.030
200-110-07	.040
200-110-07	.040

New York • 1-800-222-3375
631-244-8060 • fax 631-244-0556
61 Floyd Run, Bohemia, NY 11716
Puerto Rico
787-832-2499 • fax 787-832-2939
234 Balboa St., Mayaquez, Puerto Rico 00681-2605
e-mail: info@wsmparts.com • www.wsmparts.com

WSM Pistons

PISTON KIT APPLICATION CHART

Model	Cyl.	Bore	Part No.	Pos.	Size
120 HP 88-94	4	3.685	100-135PK	Port	Std.
90 degree Looper			100-135SK	Stbd.	Std.
Big Bore			100-135-04PK	Port	.010
			100-135-04SK	Stbd.	.010
			100-135-05PK	Port	.020
			100-135-05SK	Stbd.	.020
			100-135-06PK	Port	.030
			100-135-06SK	Stbd.	.030
			100-135-07PK	Port	.040
			100-135-07SK	Stbd.	.040
125 HP 88-91	4	3.685	100-135PK	Port	Std.
90 degree Looper			100-135SK	Stbd.	Std.
Big Bore			100-135-04PK	Port	.010
			100-135-04SK	Stbd.	.010
			100-135-05PK	Port	.020
			100-135-05SK	Stbd.	.020
			100-135-06PK	Port	.030
			100-135-06SK	Stbd.	.030
			100-135-07PK	Port	.040
			100-135-07SK	Stbd.	.040
130 HP 95-99	4	3.685	100-135PK	Port	Std.
90 degree Looper			100-135SK	Stbd.	Std.
Big Bore			100-135-04PK	Port	.010
			100-135-04SK	Stbd.	.010
			100-135-05PK	Port	.020
			100-135-05SK	Stbd.	.020
			100-135-06PK	Port	.030
			100-135-06SK	Stbd.	.030
			100-135-07PK	Port	.040
			100-135-07SK	Stbd.	.040
130 HP E-Tec	4	3.60	100-131PK	Port	Std.
			100-131SK	Stbd.	Std.
			100-131-05PK	Port	.020
			100-131-05SK	Stbd.	.020
			100-131-06PK	Port	.030
			100-131-06SK	Stbd.	.030
			100-131-07PK	Port	.040
			100-131-07SK	Stbd.	.040
135 HP 74-76	4	3.50	100-110K		Std.
Cross Flow			100-110-04K		.010
			100-110-05K		.020
			100-110-06K		.030
			100-110-07K		.040

RING SETS

Ring No.	Size
200-135	Std.
200-135	Std.
200-135-04	.010
200-135-04	.010
200-135-05	.020
200-135-05	.020
200-135-06	.030
200-135-06	.030
200-135-07	.040
200-135-07	.040
200-135	Std.
200-135	Std.
200-135-04	.010
200-135-04	.010
200-135-05	.020
200-135-05	.020
200-135-06	.030
200-135-06	.030
200-135-07	.040
200-135-07	.040
200-135	Std.
200-135	Std.
200-135-04	.010
200-135-04	.010
200-135-05	.020
200-135-05	.020
200-135-06	.030
200-135-06	.030
200-135-07	.040
200-135-07	.040
200-133	Std.
200-133	Std.
200-133-05	.020
200-133-05	.020
200-133-06	.030
200-133-06	.030
200-133-07	.040
200-133-07	.040
200-110	Std.
200-110-04	.010
200-110-05	.020
200-110-06	.030
200-110-07	.040

PRECISION
Arizona • 1-800-977-1414
480-966-1550 • fax 480-966-1565
16441 N. 91St. Suite 105 Scottsdale, AZ 85260
Florida • 1-866-417-4072
941-238-0960 • fax 941-238-0965
1899 60th Place East, Bradenton, FL 34203
e-mail: info@wsmparts.com • www.wsmparts.com

WSM Pistons

PISTON KIT APPLICATION CHART / RING SETS

Model	Cyl.	Bore	Part No.	Pos.	Size	Ring No.	Size
135 HP 2000 -04	4	3.60	100-133PK	Port	Std.	200-133	Std.
Ficht Motor			100-133SK	Stbd.	Std.	200-133	Std.
			100-133-05PK	Port	.020	200-133-05	.020
			100-133-05SK	Stbd.	.020	200-133-05	.020
			100-133-06PK	Port	.030	200-133-06	.030
			100-133-06SK	Stbd.	.030	200-133-06	.030
			100-133-07PK	Port	.040	200-133-07	.040
			100-133-07SK	Stbd.	.040	200-133-07	.040
140 HP 77-84	4	3.50	100-110K		Std.	200-110	Std.
Cross Flow			100-110-04K		.010	200-110-04	.010
			100-110-05K		.020	200-110-05	.020
			100-110-06K		.030	200-110-06	.030
			100-110-07K		.040	200-110-07	.040
140 HP 85-87	4	3.50	100-115PK	Port	Std.	200-110	Std.
90 degree Looper			100-115SK	Stbd.	Std.	200-110	Std.
Small Bore			100-115-04PK	Port	.010	200-110-04	.010
			100-115-04SK	Stbd.	.010	200-110-04	.010
			100-115-05PK	Port	.020	200-110-05	.020
			100-115-05SK	Stbd.	.020	200-110-05	.020
			100-115-06PK	Port	.030	200-110-06	.030
			100-115-06SK	Stbd.	.030	200-110-06	.030
			100-115-07PK	Port	.040	200-110-07	.040
			100-115-07SK	Stbd.	.040	200-110-07	.040
140 HP 88-94	4	3.685	100-135PK	Port	Std.	200-135	Std.
90 degree Looper			100-135SK	Stbd.	Std.	200-135	Std.
Big Bore			100-135-04PK	Port	.010	200-135-04	.010
			100-135-04SK	Stbd.	.010	200-135-04	.010
			100-135-05PK	Port	.020	200-135-05	.020
			100-135-05SK	Stbd.	.020	200-135-05	.020
			100-135-06PK	Port	.030	200-135-06	.030
			100-135-06SK	Stbd.	.030	200-135-06	.030
			100-135-07PK	Port	.040	200-135-07	.040
			100-135-07SK	Stbd.	.040	200-135-07	.040
150 HP 78-91	6	3.50	100-110K		Std.	200-110	Std.
Cross Flow			100-110-04K		.010	200-110-04	.010
			100-110-05K		.020	200-110-05	.020
			100-110-06K		.030	200-110-06	.030
			100-110-07K		.040	200-110-07	.040
150 HP 91-99	6	3.60	100-130PK	Port	Std.	200-130	Std.
60 degree			100-130SK	Stbd.	Std.	200-130	Std.
			100-130-04PK	Port	.010	200-130-04	.010
			100-130-04SK	Stbd.	.010	200-130-04	.010
			100-130-05PK	Port	.020	200-130-05	.020
			100-130-05SK	Stbd.	.020	200-130-05	.020
			100-130-06PK	Port	.030	200-130-06	.030
			100-130-06SK	Stbd.	.030	200-130-06	.030
			100-130-07PK	Port	.040	200-130-07	.040
			100-130-07SK	Stbd.	.040	200-130-07	.040

New York • 1-800-222-3375
631-244-8060 • fax 631-244-0556
61 Floyd Run, Bohemia, NY 11716
Puerto Rico
787-832-2499 • fax 787-832-2939
234 Balboa St., Mayaquez, Puerto Rico 00681-2605
e-mail: info@wsmparts.com • www.wsmparts.com

WSM Pistons

PISTON KIT APPLICATION CHART / RING SETS

Model	Cyl.	Bore	Part No.	Pos.	Size	Ring No.	Size
150 HP E-Tec	6	3.60	100-131PK	Port	Std.	200-133	Std.
2007 & up			100-131SK	Stbd.	Std.	200-133	Std.
			100-131-05PK	Port	.020	200-133-05	.020
			100-131-05SK	Stbd.	.020	200-133-05	.020
			100-131-06PK	Port	.030	200-133-06	.030
			100-131-06SK	Stbd.	.030	200-133-06	.030
			100-131-07PK	Port	.040	200-133-07	.040
			100-131-07SK	Stbd.	.040	200-133-07	.040
150 HP 98 - 2006	6	3.60	100-133PK	Port	Std.	200-133	Std.
Ficht Motor			100-133SK	Stbd.	Std.	200-133	Std.
			100-133-05PK	Port	.020	200-133-05	.020
			100-133-05SK	Stbd.	.020	200-133-05	.020
			100-133-06PK	Port	.030	200-133-06	.030
			100-133-06SK	Stbd.	.030	200-133-06	.030
			100-133-07PK	Port	.040	200-133-07	.040
			100-133-07SK	Stbd.	.040	200-133-07	.040
175 HP 77-83	6	3.50	100-110K		Std.	200-110	Std.
Cross Flow			100-110-04K		.010	200-110-04	.010
			100-110-05K		.020	200-110-05	.020
			100-110-06K		.030	200-110-06	.030
			100-110-07K		.040	200-110-07	.040
175 HP 86-91	6	3.625	100-140K		Std.	200-140	Std.
Cross Flow			100-140-04K		.010	200-140-04	.010
3 5/8"			100-140-05K		.020	200-140-05	.020
			100-140-06K		.030	200-140-06	.030
			100-140-07K		.040	200-140-07	.040
175 HP 91-99	6	3.60	100-130PK	Port	Std.	200-130	Std.
60 degree			100-130SK	Stbd.	Std.	200-130	Std.
			100-130-04PK	Port	.010	200-130-04	.010
			100-130-04SK	Stbd.	.010	200-130-04	.010
			100-130-05PK	Port	.020	200-130-05	.020
			100-130-05SK	Stbd.	.020	200-130-05	.020
			100-130-06PK	Port	.030	200-130-06	.030
			100-130-06SK	Stbd.	.030	200-130-06	.030
			100-130-07PK	Port	.040	200-130-07	.040
			100-130-07SK	Stbd.	.040	200-130-07	.040
175 HP 98-2006	6	3.60	100-133PK	Port	Std.	200-133	Std.
Ficht Motor			100-133SK	Stbd.	Std.	200-133	Std.
			100-133-05PK	Port	.020	200-133-05	.020
			100-133-05SK	Stbd.	.020	200-133-05	.020
			100-133-06PK	Port	.030	200-133-06	.030
			100-133-06SK	Stbd.	.030	200-133-06	.030
			100-133-07PK	Port	.040	200-133-07	.040
			100-133-07SK	Stbd.	.040	200-133-07	.040

PRECISION
Arizona • 1-800-977-1414
480-966-1550 • fax 480-966-1565
16441 N. 91St. Suite 105 Scottsdale, AZ 85260
Florida • 1-866-417-4072
941-238-0960 • fax 941-238-0965
1899 60th Place East, Bradenton, FL 34203
e-mail: info@wsmparts.com • www.wsmparts.com

WSM Pistons

PISTON KIT APPLICATION CHART

Model	Cyl.	Bore	Part No.	Pos.	Size
175 HP E-Tec	6	3.60	100-131PK	Port	Std.
2007 & up			100-131SK	Stbd.	Std.
			100-131-05PK	Port	.020
			100-131-05SK	Stbd.	.020
			100-131-06PK	Port	.030
			100-131-06SK	Stbd.	.030
			100-131-07PK	Port	.040
			100-131-07SK	Stbd.	.040
200 HP 79-83	6	3.50	100-110K		Std.
Cross Flow			100-110-04K		.010
3 1/2"			100-110-05K		.020
			100-110-06K		.030
			100-110-07K		.040
200 HP 85-87	6	3.50	100-115PK	Port	Std.
Looper			100-115SK	Stbd.	Std.
Small Bore			100-115-04PK	Port	.010
			100-115-04SK	Stbd.	.010
			100-115-05PK	Port	.020
			100-115-05SK	Stbd.	.020
			100-115-06PK	Port	.030
			100-115-06SK	Stbd.	.030
			100-115-07PK	Port	.040
			100-115-07SK	Stbd.	.040
200 HP 93-99	6	3.685	100-125PK	Port	Std.
Ocean Pro,			100-125SK	Stbd.	Std.
Ocean Runner			100-125-04PK	Port	.010
Loop Charge /			100-125-04SK	Stbd.	.010
Finger Port			100-125-05PK	Port	.020
			100-125-05SK	Stbd.	.020
			100-125-06PK	Port	.030
			100-125-06SK	Stbd.	.030
			100-125-07PK	Port	.040
			100-125-07SK	Stbd.	.040
200 HP E-Tec	6	3.60	100-131PK	Port	Std.
2007 & up			100-131SK	Stbd.	Std.
			100-131-05PK	Port	.020
			100-131-05SK	Stbd.	.020
			100-131-06PK	Port	.030
			100-131-06SK	Stbd.	.030
			100-131-07PK	Port	.040
			100-131-07SK	Stbd.	.040

RING SETS

Ring No.	Size
200-133	Std.
200-133	Std.
200-133-05	.020
200-133-05	.020
200-133-06	.030
200-133-06	.030
200-133-07	.040
200-133-07	.040
200-110	Std.
200-110-04	.010
200-110-05	.020
200-110-06	.030
200-110-07	.040
200-110	Std.
200-110	Std.
200-110-04	.010
200-110-04	.010
200-110-05	.020
200-110-05	.020
200-110-06	.030
200-110-06	.030
200-110-07	.040
200-110-07	.040
200-125	Std.
200-125	Std.
200-125-04	.010
200-125-04	.010
200-125-05	.020
200-125-05	.020
200-125-06	.030
200-125-06	.030
200-125-07	.040
200-125-07	.040
200-133	Std.
200-133	Std.
200-133-05	.020
200-133-05	.020
200-133-06	.030
200-133-06	.030
200-133-07	.040
200-133-07	.040

New York • 1-800-222-3375
631-244-8060 • fax 631-244-0556
61 Floyd Run, Bohemia, NY 11716
Puerto Rico
787-832-2499 • fax 787-832-2939
234 Balboa St., Mayaquez, Puerto Rico 00681-2605
e-mail: info@wsmparts.com • www.wsmparts.com

WSM Pistons

PISTON KIT APPLICATION CHART

Model	Cyl.	Bore	Part No.	Pos.	Size
200 HP 88-92	6	3.685	**100-135PK**	Port	Std.
Looper			**100-135SK**	Stbd.	Std.
Big Bore			**100-135-04PK**	Port	.010
			100-135-04SK	Stbd.	.010
			100-135-05PK	Port	.020
			100-135-05SK	Stbd.	.020
			100-135-06PK	Port	.030
			100-135-06SK	Stbd.	.030
			100-135-07PK	Port	.040
			100-135-07SK	Stbd.	.040
200 HP 90	6	3.685	**100-135PK**	Port	Std.
Commercial			**100-135SK**	Stbd.	Std.
			100-135-04PK	Port	.010
			100-135-04SK	Stbd.	.010
			100-135-05PK	Port	.020
			100-135-05SK	Stbd.	.020
			100-135-06PK	Port	.030
			100-135-06SK	Stbd.	.030
			100-135-07PK	Port	.040
			100-135-07SK	Stbd.	.040
200 HP 3.3L Ficht	6	3.854	**100-134PK**	Port	Std.
Loop Charged			**100-134SK**	Stbd.	Std.
			100-134-05PK	Port	.020
			100-134-05SK	Stbd.	.020
			100-134-06PK	Port	.030
			100-134-06SK	Stbd.	.030
	(Available in Wiseco Only)			Port	.040
	(Available in Wiseco Only)			Stbd.	.040
200-250 HP E-Tec	6	3.854	**100-136PK**	Port	Std.
2007 & up			**100-136SK**	Stbd.	Std.
3.3			**100-136-05PK**	Port	.020
			100-136-05SK	Stbd.	.020
			100-136-06PK	Port	.030
			100-136-06SK	Stbd.	.030
200-250 HP E-Tec	6	3.854	**100-137PK**	Port	Std.
2007 & up			**100-137SK**	Stbd.	Std.
3.4			**100-137-05PK**	Port	.020
			100-137-05SK	Stbd.	.020
			100-137-06PK	Port	.030
			100-137-06SK	Stbd.	.030

RING SETS

Ring No.	Size
200-135	Std.
200-135	Std.
200-135-04	.010
200-135-04	.010
200-135-05	.020
200-135-05	.020
200-135-06	.030
200-135-06	.030
200-135-07	.040
200-135-07	.040
200-135	Std.
200-135	Std.
200-135-04	.010
200-135-04	.010
200-135-05	.020
200-135-05	.020
200-135-06	.030
200-135-06	.030
200-135-07	.040
200-135-07	.040
200-134	Std.
200-134	Std.
200-134-05	.020
200-134-05	.020
200-134-06	.030
200-134-06	.030
200-134	Std.
200-134	Std.
200-134-05	.020
200-134-05	.020
200-134-06	.030
200-134-06	.030
200-134	Std.
200-134	Std.
200-134-05	.020
200-134-05	.020
200-134-06	.030
200-134-06	.030

PRECISION
Arizona • 1-800-977-1414
480-966-1550 • fax 480-966-1565
16441 N. 91St. Suite 105 Scottsdale, AZ 85260
Florida • 1-866-417-4072
941-238-0960 • fax 941-238-0965
1899 60th Place East, Bradenton, FL 34203
e-mail: info@wsmparts.com • www.wsmparts.com

WSM Pistons

PISTON KIT APPLICATION CHART

Model	Cyl.	Bore	Part No.	Pos.	Size
225 HP 85-87	6	3.50	100-115PK	Port	Std.
Looper			100-115SK	Stbd.	Std.
Small Bore			100-115-04PK	Port	.010
			100-115-04SK	Stbd.	.010
			100-115-05PK	Port	.020
			100-115-05SK	Stbd.	.020
			100-115-06PK	Port	.030
			100-115-06SK	Stbd.	.030
			100-115-07PK	Port	.040
			100-115-07SK	Stbd.	.040
225 HP 93-99	6	3.685	100-125PK	Port	Std.
Ocean Pro,			100-125SK	Stbd.	Std.
Ocean Runner			100-125-04PK	Port	.010
Finger Port			100-125-04SK	Stbd.	.010
			100-125-05PK	Port	.020
			100-125-05SK	Stbd.	.020
			100-125-06PK	Port	.030
			100-125-06SK	Stbd.	.030
			100-125-07PK	Port	.040
			100-125-07SK	Stbd.	.040
225 HP 88-92	6	3.685	100-135PK	Port	Std.
Looper			100-135SK	Stbd.	Std.
Big Bore			100-135-04PK	Port	.010
			100-135-04SK	Stbd.	.010
			100-135-05PK	Port	.020
			100-135-05SK	Stbd.	.020
			100-135-06PK	Port	.030
			100-135-06SK	Stbd.	.030
			100-135-07PK	Port	.040
			100-135-07SK	Stbd.	.040
225 HP 2000-04 Ficht	6		100-134PK	Port	Std.
3.3L Loop Charged			100-134SK	Stbd.	Std.
			100-134-05PK	Port	.020
			100-134-05SK	Stbd.	.020
			100-134-06PK	Port	.030
			100-134-06SK	Stbd.	.030
225 HP E-Tec	6	3.854	100-136PK	Port	Std.
2007 & up			100-136SK	Stbd.	Std.
3.3 Litre			100-136-05PK	Port	.020
			100-136-05SK	Stbd.	.020
			100-136-06PK	Port	.030
			100-136-06SK	Stbd.	.030

RING SETS

Ring No.	Size
200-110	Std.
200-110	Std.
200-110-04	.010
200-110-04	.010
200-110-05	.020
200-110-05	.020
200-110-06	.030
200-110-06	.030
200-110-07	.040
200-110-07	.040
200-125	Std.
200-125	Std.
200-125-04	.010
200-125-04	.010
200-125-05	.020
200-125-05	.020
200-125-06	.030
200-125-06	.030
200-125-07	.040
200-125-07	.040
200-135	Std.
200-135	Std.
200-135-04	.010
200-135-04	.010
200-135-05	.020
200-135-05	.020
200-135-06	.030
200-135-06	.030
200-135-07	.040
200-135-07	.040
200-134	Std.
200-134	Std.
200-134-05	.020
200-134-05	.020
200-134-06	.030
200-134-06	.030
200-134	Std.
200-134	Std.
200-134-05	.020
200-134-05	.020
200-134-06	.030
200-134-06	.030

New York • 1-800-222-3375
631-244-8060 • fax 631-244-0556
61 Floyd Run, Bohemia, NY 11716
Puerto Rico
787-832-2499 • fax 787-832-2939
234 Balboa St., Mayaquez, Puerto Rico 00681-2605
e-mail: info@wsmparts.com • www.wsmparts.com

WSM Pistons

PISTON KIT APPLICATION CHART

Model	Cyl.	Bore	Part No.	Pos.	Size
235 HP 78-79	6	3.50	100-110K		Std.
Cross Flow			100-110-04K		.010
3 1/2″			100-110-05K		.020
			100-110-06K		.030
			100-110-07K		.040
235 HP 80-85	6	3.625	100-140K		Std.
Cross Flow			100-140-04K		.010
3 5/8″			100-140-05K		.020
			100-140-06K		.030
			100-140-07K		.040
2.6 Liter 82-86	6	3.625	100-140K		Std.
Cross Flow			100-140-04K		.010
Big Bore			100-140-05K		.020
Except GT			100-140-06K		.030
Models			100-140-07K		.040
250 HP 91-95	8	3.685	100-135PK	Port	Std.
Looper			100-135SK	Stbd.	Std.
Big Bore			100-135-04PK	Port	.010
			100-135-04SK	Stbd.	.010
			100-135-05PK	Port	.020
			100-135-05SK	Stbd.	.020
			100-135-06PK	Port	.030
			100-135-06SK	Stbd.	.030
			100-135-07PK	Port	.040
			100-135-07SK	Stbd.	.040
250 HP 3.3L Ficht	6	3.854	100-134PK	Port	Std.
2000-04 Loop Charged			100-134SK	Stbd.	Std.
			100-134-05PK	Port	.020
			100-134-05SK	Stbd.	.020
			100-134-06PK	Port	.030
			100-134-06SK	Stbd.	.030
250 HP E-Tec	6	3.854	100-136PK	Port	Std.
2007 & up			100-136SK	Stbd.	Std.
3.3 Liter			100-136-05PK	Port	.020
			100-136-05SK	Stbd.	.020
			100-136-06PK	Port	.030
			100-136-06SK	Stbd.	.030

RING SETS

Ring No.	Size
200-110	Std.
200-110-04	.010
200-110-05	.020
200-110-06	.030
200-110-07	.040
200-140	Std.
200-140-04	.010
200-140-05	.020
200-140-06	.030
200-140-07	.040
200-140	Std.
200-140-04	.010
200-140-05	.020
200-140-06	.030
200-140-07	.040
200-135	Std.
200-135	Std.
200-135-04	.010
200-135-04	.010
200-135-05	.020
200-135-05	.020
200-135-06	.030
200-135-06	.030
200-135-07	.040
200-135-07	.040
200-134	Std.
200-134	Std.
200-134-05	.020
200-134-05	.020
200-134-06	.030
200-134-06	.030
200-134	Std.
200-134	Std.
200-134-05	.020
200-134-05	.020
200-134-06	.030
200-134-06	.030

PRECISION
Arizona • 1-800-977-1414
480-966-1550 • fax 480-966-1565
16441 N. 91St. Suite 105 Scottsdale, AZ 85260
Florida • 1-866-417-4072
941-238-0960 • fax 941-238-0965
1899 60th Place East, Bradenton, FL 34203
e-mail: info@wsmparts.com • www.wsmparts.com

WSM Pistons

PISTON KIT APPLICATION CHART

Model	Cyl.	Bore	Part No.	Pos.	Size
275 HP 85-87	8	3.50	100-115PK	Port	Std.
Looper			100-115SK	Stbd.	Std.
Small Bore			100-115-04PK	Port	.010
			100-115-04SK	Stbd.	.010
			100-115-05PK	Port	.020
			100-115-05SK	Stbd.	.020
			100-115-06PK	Port	.030
			100-115-06SK	Stbd.	.030
			100-115-07PK	Port	.040
			100-115-07SK	Stbd.	.040
275 HP 88	8	3.685	100-135PK	Port	Std.
Looper			100-135SK	Stbd.	Std.
Big Bore			100-135-04PK	Port	.010
			100-135-04SK	Stbd.	.010
			100-135-05PK	Port	.020
			100-135-05SK	Stbd.	.020
			100-135-06PK	Port	.030
			100-135-06SK	Stbd.	.030
			100-135-07PK	Port	.040
			100-135-07SK	Stbd.	.040
300 HP 85-87	8	3.50	100-115PK	Port	Std.
Looper			100-115SK	Stbd.	Std.
Small Bore			100-115-04PK	Port	.010
			100-115-04SK	Stbd.	.010
			100-115-05PK	Port	.020
			100-115-05SK	Stbd.	.020
			100-115-06PK	Port	.030
			100-115-06SK	Stbd.	.030
			100-115-07PK	Port	.040
			100-115-07SK	Stbd.	.040
300 HP 88-95	8	3.685	100-135PK	Port	Std.
Looper Big Bore			100-135SK	Stbd.	Std.
			100-135-04PK	Port	.010
			100-135-04SK	Stbd.	.010
			100-135-05PK	Port	.020
			100-135-05SK	Stbd.	.020
			100-135-06PK	Port	.030
			100-135-06SK	Stbd.	.030
			100-135-07PK	Port	.040
			100-135-07SK	Stbd.	.040

RING SETS

Ring No.	Size
200-110	Std.
200-110	Std.
200-110-04	.010
200-110-04	.010
200-110-05	.020
200-110-05	.020
200-110-06	.030
200-110-06	.030
200-110-07	.040
200-110-07	.040
200-135	Std.
200-135	Std.
200-135-04	.010
200-135-04	.010
200-135-05	.020
200-135-05	.020
200-135-06	.030
200-135-06	.030
200-135-07	.040
200-135-07	.040
200-110	Std.
200-110	Std.
200-110-04	.010
200-110-04	.010
200-110-05	.020
200-110-05	.020
200-110-06	.030
200-110-06	.030
200-110-07	.040
200-110-07	.040
200-135	Std.
200-135	Std.
200-135-04	.010
200-135-04	.010
200-135-05	.020
200-135-05	.020
200-135-06	.030
200-135-06	.030
200-135-07	.040
200-135-07	.040

New York • 1-800-222-3375
631-244-8060 • fax 631-244-0556
61 Floyd Run, Bohemia, NY 11716
Puerto Rico
787-832-2499 • fax 787-832-2939
234 Balboa St., Mayaquez, Puerto Rico 00681-2605
e-mail: info@wsmparts.com • www.wsmparts.com

Stainless Bolt Kits

Lower Bearing Cover Bolts
Crossflow Only
O.E. No. 317763
Part No. 810-100

Cylinder Sleeve

Part No. 250-119
Fits: **200 1991-2002 6 Cylinder Ocean Pro**
225 1991-2002 6 Cylinder Ocean Pro
250 1993-1995 8 Cylinder Loopers
300 1988-1993 8 Cylinder Loopers

Crankshafts

850-110

850-120

850-121

850-125

Model	O.E No.	Part No.
40-50 HP 2 Cyl 1993-98 (17spline w/o sleeve on bottom of crankshaft)	338267	**850-120**
40-55 HP Crankshaft 1999-2005	439939	**850-121**
40-60 HP 2 Cyl 1978-83 (14spline)	329928	**850-110**
60-70 HP 3 Cyl 93-98	338957	**850-125**

PRECISION
Arizona • 1-800-977-1414
480-966-1550 • fax 480-966-1565
16441 N. 91St. Suite 105 Scottsdale, AZ 85260
Florida • 1-866-417-4072
941-238-0960 • fax 941-238-0965
1899 60th Place East, Bradenton, FL 34203
e-mail: info@wsmparts.com • www.wsmparts.com

Connecting Rods

Part No. 800-100
O.E. No. 395861
35-60 hp 86-03 Casting No. 395861, 327212

Replacement Rod Bolt 805-106
O.E. No. 308186 Torque Spec. 30 Ft. Lbs.

Part No. 800-104
O.E. No. 394462
60 hp 89 & Up, 70 hp 86 & Up

Replacement Rod Bolt 805-106
O.E. No. 308186 Torque Spec. 30 Ft. Lbs.

Part No. 800-106
O.E. No. 5006383
V4 / V6 Cross Flow, Eagle Series, 60 degree

Replacement Rod Bolt 805-106
O.E. No. 308186 Torque Spec. 30 Ft. Lbs.

Replacement Rod Bolt 805-106
O.E. No. 308186 Torque Spec. 30 Ft. Lbs.

Replacement Rod Bolt 805-107
O.E. No. 330081 Torque Spec. 42 Ft. Lbs.

New York • 1-800-222-3375
631-244-8060 • fax 631-244-0556
61 Floyd Run, Bohemia, NY 11716
Puerto Rico
787-832-2499 • fax 787-832-2939
234 Balboa St., Mayaquez, Puerto Rico 00681-2605
e-mail: info@wsmparts.com • www.wsmparts.com

Bearings

Upper Rod Bearings Picture Gallery

Upper Rod Bearing
Part No. 010-145
O.E. 386014
Fits: 9.9-15 HP 1974-80

Upper Rod Needles Only
Part No. 010-139
O.E No. 393283
Fits: 9.9-15 HP 1981-87

Upper Rod Bearing
Part No. 010-140
O.E. 395627
Fits: 2,3,4,6 cyl. Cross Flow & 60 degree with 3/4" wrist pin

Upper Rod Bearing Needles & Washers
Part No. 010-140-01
O.E No. 395627
Fits: 2,3,4,6 cyl. Cross Flow & 60 degree with 3/4" wrist pin

Upper Rod Bearings
Part No. 010-141
O.E. 434844
Fits: All 90 degree Loopers V4/V6/V8

Upper Rod Bearing Needles & Washers
Part No. 010-141-01
O.E No. 434844
Fits: All 90 degree Loopers V4/V6/V8

Lower Rod Bearings Picture Gallery

Part No. 010-154
O.E. 395401
Fits: 9-15 HP

Part No. 010-150-01
O.E. 388344
Fits: 2, 3 cyl. 20-75 HP

Part No. 010-156
O.E. 387787
Fits: V4-V6 X-flow, 60 degree, FFi E-Tec

Part No. 010-157
O.E. 396041
Fits: V4-V6-V8 looper

PRECISION
Arizona • 1-800-977-1414
480-966-1550 • fax 480-966-1565
16441 N. 91St. Suite 105 Scottsdale, AZ 85260
Florida • 1-866-417-4072
941-238-0960 • fax 941-238-0965
1899 60th Place East, Bradenton, FL 34203
e-mail: info@wsmparts.com • www.wsmparts.com
VISA MasterCard AMERICAN EXPRESS DISCOVER NOVUS

Crankshaft Bearings

Upper Main Bearing Picture Gallery

Upper Main
Part No. 010-289
O.E. 5005268
Fits: E-Tec 2-3 Cyl.

Upper Main
Part No. 010-290
O.E. 386481
Fits: 1.51" O.D. 20-35 HP

Upper Main
Part No. 010-291
O.E. 393896
Fits: 1.63" O.D. 20-35 HP

Upper Main
Part No. 010-292
O.E. 390900
Fits: 2 & 3 Cyl.

Upper Main Crossflow Looper
Part No. 010-293
O.E. 385822
Fits: V4-V6-V8

Upper Main Complete Bearing
Part No. 010-282
Fits: V4/V6, FFi, ETEC

Upper Main Split Rollers
Part No. 010-282-01
O.E. 387041
Fits: Fits: V4/V6, FFi, ETEC

Upper Main Outer Race
Part No. 010-282-02
O.E. 320499
Fits: Fits: V4/V6, FFi, ETEC

Center Main Bearing Picture Gallery

Center Main Split Rollers Only
Part No. 010-154
O.E. No. 395401
Fits: 9.9-15 hp

Center Main Split Rollers
Part No. 010-280
O.E. 389613
Fits: 20-35 HP

Center Main Complete Bearing
Part No. 010-281
Fits: 40-75 HP

Center Main Split Rollers Only
Part No. 010-281-01
O.E. 378252
Fits: 40-75 HP

Center Main Outer Race Only
Part No. 010-281-02
O.E. 310433
Fits: 40-75 HP

Center Main Complete Bearing
Part No. 010-282
Fits: V4/V6/V8 Cross Flow, Looper, 60 degree, FFi, ETEC

Center Main Split Rollers
Part No. 010-282-01
O.E. 387041
Fits: V4/V6/V8 Cross Flow, Looper, 60 degree, FFi, ETEC

Center Main Outer Race
Part No. 010-282-02
O.E. 320499
Fits: V4/V6/V8 Cross Flow, Looper, 60 degree, FFi, ETEC

New York • 1-800-222-3375
631-244-8060 • fax 631-244-0556
61 Floyd Run, Bohemia, NY 11716
Puerto Rico
787-832-2499 • fax 787-832-2939
234 Balboa St., Mayaquez, Puerto Rico 00681-2605
e-mail: info@wsmparts.com • www.wsmparts.com

Crankshaft Bearings

Lower Main Bearing Picture Gallery

Lower Main
Part No. 010-271
O.E. No. 385173
Fits: 9.9-15hp

Lower Main
Part No. 010-240
O.E. 330854
Fits: 18-35 HP

Lower Main
Part No. 010-221-01
O.E. 377139
Fits: 40-75 HP

Lower Main
Part No. 010-206-01
O.E. 385503
Fits: V4-V6 cross flow

Lower Main
Part No. 010-222-01
O.E. 433503
Fits: V4-V6 60 degree, FFi, ETEC

Lower Main
Part No. 010-207-05
O.E. 390641
Fits: V4-V6-V8 looper

PRECISION
Arizona • 1-800-977-1414
480-966-1550 • fax 480-966-1565
16441 N. 91St. Suite 105 Scottsdale, AZ 85260
Florida • 1-866-417-4072
941-238-0960 • fax 941-238-0965
1899 60th Place East, Bradenton, FL 34203
e-mail: info@wsmparts.com • www.wsmparts.com
VISA MasterCard AMERICAN EXPRESS DISCOVER NOVUS

Bearings

Horse Power	Model	Year	Cyl.	Ref# 1 Lower Main Bearing	Ref# 2 Center Main Bearing cmplte	Ref# 2 Center Main Split Caged	Ref# 2 Center Main Needles Only	Ref# 3 Center Main Outer Race	Ref# 3 Upper Main Bearing	Ref# 4 Lower Rod Split Caged	Ref# 4 Lower Rod Needles Only	Ref# 5 Upper Rod Needles	Ref# 5 Upper Rod Caged
9.9-15		74-80	2	010-271		010-154				010-154		010-145	
9.9-15		81 & up	2	010-271		010-154				010-154		010-139	
20		81-84	2	010-240		010-280			010-290	010-150		010-140-01	010-140
20		85-99	2	010-240		010-280			010-291	010-150		010-140-01	010-140
25		77-80	2	010-240		010-280			010-290	010-150			
25		81-84	2	010-240		010-280			010-290	010-150		010-140-01	010-140
25		85-03	2	010-240		010-280			010-291	010-150		010-140-01	010-140
28		87-03	2	010-240		010-280			010-291	010-150		010-140-01	010-140
30		84	2	010-240		010-280			010-290	010-150		010-140-01	010-140
30		85-03	2	010-240		010-280			010-291	010-150		010-140-01	010-140
35		81-84	2	010-240		010-280			010-290	010-150		010-140-01	010-140
35		85-97	2	010-240		010-280			010-291	010-150		010-140-01	010-140
40		81-03	2	010-221-01	010-281	010-281-01			010-292	010-150		010-140-01	010-140
40 ETEC		2000-Up	3	010-222-01	010-282	010-282-01		010-282-02	010-289			010-140-01	010-140
45		85-03	2	010-221-01	010-281	010-281-01			010-292	010-150		010-140-01	010-140
48		87-03	2	010-221-01	010-281	010-281-01			010-292	010-150		010-140-01	010-140
50		74-03	2	010-221-01	010-281	010-281-01			010-292	010-150		010-140-01	010-140
50 ETEC		2004-Up	2	010-222-01	010-282	010-282-01			010-289			010-140-01	010-140
55		76-03	2	010-221-01	010-281	010-281-01			010-292	010-150		010-140-01	010-140
55 ETEC		2004-Up	2	010-222-01	010-282	010-282-01			010-289				
60		80-03	2	010-221-01	010-281	010-281-01			010-292	010-150		010-140-01	010-140
60 ETEC		2004-Up	2	010-222-01	010-282	010-282-01			010-289				
65		84-03	3	010-221-01	010-281	010-281-01			010-292	010-150		010-140-01	010-140
65 ETEC		2004-Up	2	010-222-01	010-282	010-282-01			010-289				
70		76-03	3	010-221-01	010-281	010-281-01			010-292	010-150		010-140-01	010-140
75		76-03	3	010-221-01	010-281	010-281-01			010-292	010-150		010-140-01	010-140
75 ETEC		2000-Up	3	010-222-01	010282	010-282-01			010-289			010-140-01	010-140

New York • 1-800-222-3375
631-244-8060 • fax 631-244-0556
61 Floyd Run, Bohemia, NY 11716
Puerto Rico
787-832-2499 • fax 787-832-2939
234 Balboa St., Mayaquez, Puerto Rico 00681-2605
e-mail: info@wsmparts.com • www.wsmparts.com

Bearings

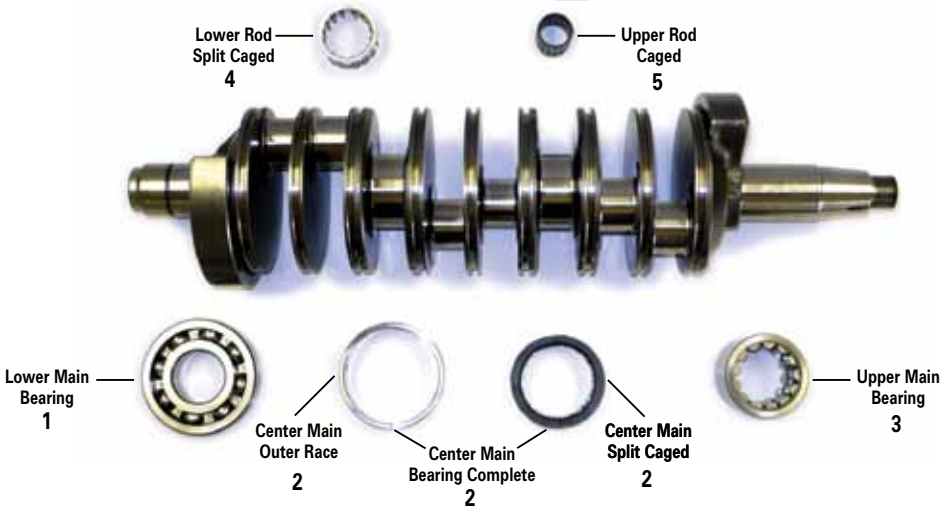

Horse Power	Model	Year	Cyl.	Ref# 1 Lower Main Bearing	Ref# 2 Center Main Bearing cmplte	Ref# 2 Center Main Split Caged	Ref# 2 Center Main Needles Only	Ref# 3 Center Main Outer Race	Ref# 3 Upper Main Bearing	Ref# 4 Lower Rod Split Caged	Ref# 4 Lower Rod Needles Only	Ref# 5 Upper Rod Needles	Ref# 5 Upper Rod Caged
85	X Flow	79-80	V4	010-206-01	010-282	010-282-01			010-293	010-156		010-140-01	010-140
88	X Flow	87-97	V4	010-206-01	010-282	010-282-01			010-293	010-156		010-140-01	010-140
90	X Flow	81 & up	V4	010-206-01	010-282	010-282-01			010-293	010-156		010-140-01	010-140
90	60' & FFI	95 & up	V4	010-222-01	010-282	010-282-01			010-282	010-156		010-140-01	010-140
90	ETEC	2004-Up	3	010-222-01	010-282	010-282-01			010-289	010-156		010-140-01	010-140
100	X Flow	84-97	V4	010-206-01	010-282	010-282-01		010-282-02	010-293	010-156		010-140-01	010-140
110	X Flow	86-97	V4	010-206-01	010-282	010-282-01			010-293	010-156		010-140-01	010-140
112	hp												
115	X Flow	74-76	V4	010-206-01	010-281	010-282-01			010-293	010-156		010-140-01	010-140
115	60' & FFI	95 & up	V4	010-222-01	010-282	010-282-01			010-282	010-156		010-140-01	010-140
120	Looper	85-98	V4	010-207-05	010-282	010-282-01			010-293	010-157		010-141-01	010-141
130	Looper												
130hp	E-Tec	07 & up	V4	010-222-01	010-282								
140	X Flow	77-84	V4	010-206-01	010-282	010-282-01			010-293	010-156		010-140-01	010-140
140	Looper	85-98	V4	010-207-05	010-282	010-282-01			010-282	010-157		010-141-01	010-141
150	X Flow	79-90	V6	010-206-01	010-282	010-282-01		010-282-02	010-293	010-156		010-140-01	010-140
150	60' & FFI	91 & up	V6	010-222-01	010-282	010-282-01			010-293	010-156		010-140-01	010-140
155	X Flow	84-91	V6	010-206-01	010-282	010-282-01			010-293	010-156		010-140-01	010-140
175	X Flow	77-90	V6	010-206-01	010-282	010-282-01			010-293	010-156		010-140-01	010-140
175	Big Bore X Flow	78-85	V6	010-206-01	010-282	010-282-01			010-293	010-156		010-140-01	010-140
175	60' & FFI E-Tec	91 & up	V6	010-222-01	010-282	010-282-01			010-282	010-156		010-140-01	010-140
185	X Flow	84-85	V6	010-206-01	010-282	010-282-01		010-282-02	010-293	010-156		010-140-01	010-140
200	X Flow	76-83	V6	010-206-01	010-282	010-282-01		010-282-02	010-293	010-156		010-140-01	010-140
200	Looper & FFI, E-Tec	85 & up	V6	010-207-05	010-282	010-282-01			010-293	010-157		010-141-01	010-141
225	Looper & FFI, E-Tec	85 & up	V6	010-207-05	010-282	010-282-01			010-293	010-157		010-141-01	010-141
235	Big Bore X Flow	78-85	V6	010-206-01	010-282	010-282-01			010-293	010-156		010-140-01	010-140
275	Looper	85-97	V8	010-207-05	010-282	010-282-01			010-293	010-157		010-141-01	010-141
300	Looper	85-97	8	010-207-05	010-282	010-282-01			010-293	010-157		010-141-01	010-141

PRECISION
Arizona • 1-800-977-1414
480-966-1550 • fax 480-966-1565
16441 N. 91St. Suite 105 Scottsdale, AZ 85260
Florida • 1-866-417-4072
941-238-0960 • fax 941-238-0965
1899 60th Place East, Bradenton, FL 34203
e-mail: info@wsmparts.com • www.wsmparts.com
VISA MasterCard AMERICAN EXPRESS DISCOVER NOVUS

Gasket Kits

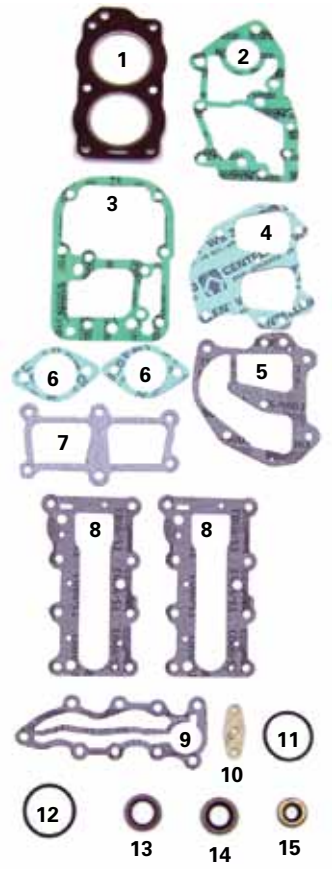

POWER HEAD GASKET KIT

Kit No. 500-118 O.E. No. 394546

9.9-15 hp 1984-1992

INDIVIDUAL GASKETS/SEALS

Item #	Description	O.E. No.	Qty.	Part No.
1	Head Gasket	330818	1	505-21
2	Base Gasket Early	324717	1	515-13
3	Base Gasket Late	325721	1	515-13-01
4	Intake Gasket	318924	1	515-10-01
5	Intake Gasket	325260	1	515-10-02
6	Carburetor Gaskets	318932	2	515-03-01
7	Bypass Gasket	319332	1	515-31-01
8	Exhaust Gaskets	318925	2	520-27
9	Water Jacket Gasket	329920	1	520-28
10	Fuel Pump Gasket	303615	1	540-02
11	Thermostat O-Ring	331188	1	515-21-01
12	Crank O-Ring	308458	1	525-10
13	Crank Oil Seal	321830	1	550-15
14	Crank Oil Seal	321831	1	550-16
15	Crank Oil Seal	321788	1	550-17

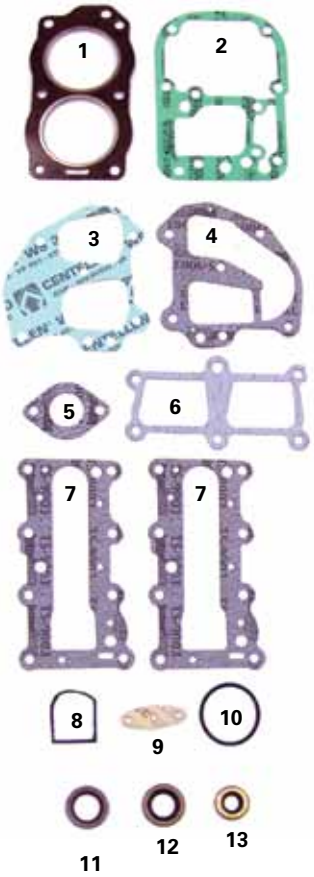

POWER HEAD GASKET KIT

Kit No. 500-119 O.E. No. 436358

9.9-15 hp 1993 & Up

INDIVIDUAL GASKETS/SEALS

Item #	Description	O.E. No.	Qty.	Part No.
1	Head Gasket	338222	1	505-22
2	Base Gasket Late	325721	1	515-13-01
3	Intake Gasket	318924	1	515-10-01
4	Intake Gasket	325260	1	515-10-02
5	Carburetor Gasket	318932	1	515-03-01
6	Bypass Gasket	319332	1	515-31-01
7	Exhaust Gaskets	318925	2	520-27
8	Thermostat O-Ring	336947	1	515-21-02
9	Fuel Pump Gasket	303615	1	540-02
10	Crank O-Ring	308458	1	525-10
11	Crank Oil Seal	321830	1	550-15
12	Crank Oil Seal	321831	1	550-16
13	Crank Oil Seal	321788	1	550-17

New York • 1-800-222-3375
631-244-8060 • fax 631-244-0556
61 Floyd Run, Bohemia, NY 11716
Puerto Rico
787-832-2499 • fax 787-832-2939
234 Balboa St., Mayaquez, Puerto Rico 00681-2605
e-mail: info@wsmparts.com • www.wsmparts.com

Gasket Kits

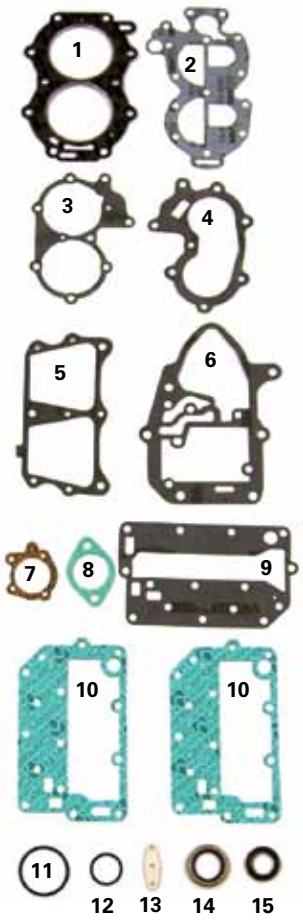

POWER HEAD GASKET KIT 2 CYL.

Kit No. 500-120 O.E. No. 433941

20 hp 1985-97, 25 hp 1979-97, 35 hp 1979-97

INDIVIDUAL GASKETS/SEALS

Item #	Description	O.E. No.	Qty.	Part No.
1	Head Gasket	329419	1	**505-15**
2	Head Cover Gasket	327674	1	**505-16**
3	Intake Gasket	321479	1	**510-10**
4	Intake Gasket	326260	1	**515-15**
5	Bypass Gasket	319661	1	**515-31**
6	Base Gasket	330621	1	**515-32**
7	Carb. to Silencer	323338	1	**515-33**
8	Carb. Gasket	325092	1	**007-494**
9	Inner Exhaust Cover	326264	1	**520-25**
10	Outer Exhaust Cover	324323	2	**520-26**
11	Crank O-Ring	319662	1	**525-06**
12	Crank O-Ring	554545	1	**525-07**
13	Fuel Pump Mount	303615	1	**540-02**
14	Upper Crank Oil Seal	328603	1	**550-08**
15	Lower Crank Oil Seal	398051	1	**550-09T**

POWER HEAD GASKET KIT 2 CYL.

Kit No. 500-125 O.E. No. 393433, 437806, 439083

40 hp 1984-97, 45 hp 1984-92, 48 hp 1987-97,
50 hp 1981-97, 55 hp 1980-97, 60 hp 1980-85

INDIVIDUAL GASKETS/SEALS

Item #	Description	O.E. No.	Qty.	Part No.
1	Head Gasket	335359	1	**505-04**
2	Head CoverGasket	315538	1	**505-11**
3	Base Gasket	326468	1	**510-03**
4	Intake Manifold	335633	1	**515-06**
5	Air Cover Gasket	330698	1	**515-07**
6	Silencer Gasket	330910	1	**515-08**
7	Carb. Gasket	325092	2	**007-494**
8	Exhaust Gasket	325211	1	**520-11**
9	Upper Crank O-Ring	313754	1	**525-03**
10	Lower Crank O-Ring	308876	1	**008-641**
11	Fuel Pump Mount	303615	1	**540-02**
12	Thermostat Gasket	27-62386	1	**540-32**
13	Upper Crank Seal	321895	1	**550-02**
14	Lower Crank Seal	331103	1	**550-04T**

PRECISION
Arizona • 1-800-977-1414
480-966-1550 • fax 480-966-1565
16441 N. 91St. Suite 105 Scottsdale, AZ 85260
Florida • 1-866-417-4072
941-238-0960 • fax 941-238-0965
1899 60th Place East, Bradenton, FL 34203
e-mail: info@wsmparts.com • www.wsmparts.com
VISA MasterCard AMERICAN EXPRESS DISCOVER NOVUS

Gasket Kits

POWER HEAD GASKET KIT 2 CYL. E-TEC

Kit No. 500-126 O.E. No. 5005907

40, 50, 55, 60, 65 hp 2004-2007

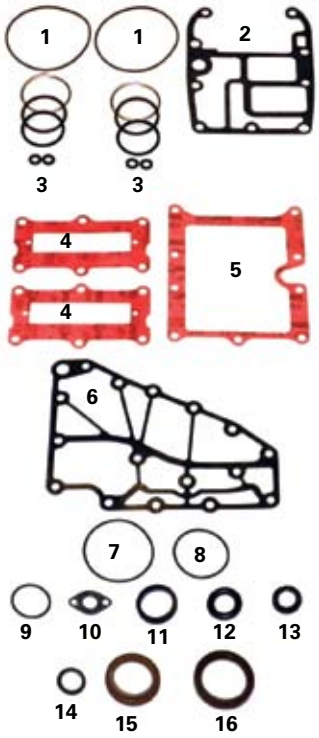

INDIVIDUAL GASKETS/SEALS

Item #	Description	O.E. No.	Qty.	Part No.
1	Head O-Ring	335523	2	505-55
2	Base Gasket	351018	1	510-03
3	Injector Kit	5007017	2	600-160
4	Reed Gaskets	350553	2	515-49
5	Throttle body to Reed Plate	350552	1	515-56
6	Exhaust Gasket	350629	1	520-31
7	Lower End Cap O-ring	338518	1	525-11
8	Valve O-Ring	314728, 354731	1	526-13
9	Thermostat Cover O-Ring	331188	1	525-12
10	Air Temp Sensor Gasket	350805	1	007-537-01
11	Plunger to Crank Case Grommet	347245	1	525-17
12	O-Ring	337087	1	525-03-01
13	Thermo Seal	335981	1	550-07
14	Rubber Washer	339044	1	525-16
15	Lower Crank Oil Seal	337085	1	550-03T
16	Upper Crank Oil Seal	351082	1	550-18

POWER HEAD GASKET KIT 2 CYL. E-TEC

Kit No. 500-126-01

2008-up

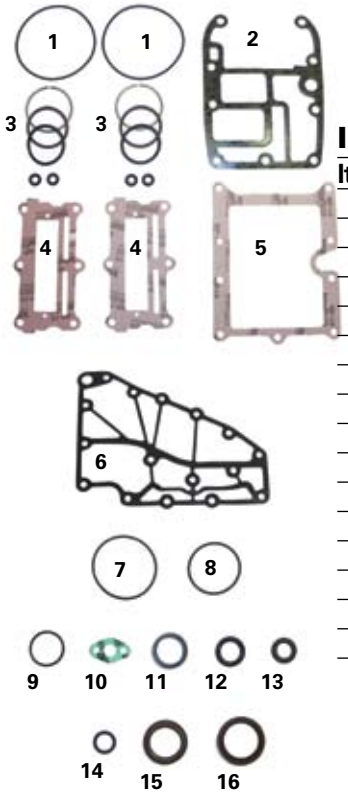

INDIVIDUAL GASKETS/SEALS

Item #	Description	O.E. No.	Qty.	Part No.
1	Head O-Ring	335523	2	505-55
2	Base Gasket	351018	1	510-03
3	Injector Kits	5007017	2	600-160
4	Reed Gaskets	350553	2	515-50
5	Throttle Body to Reed Plate	350552	1	515-56
6	Exhaust Gasket	350629	1	520-31
7	Lower End Cap O-Ring	338518	1	525-11
8	Valve O-Ring	314728/354731	1	526-13
9	Thermostat Cover O-Ring	331188	1	525-12
10	Air Temp Sensor Gasket	350805	1	007-537-01
11	Plunger To Crankcase Gasket	347245	1	525-17
12	O-Ring	337087	1	525-03-01
13	Thermo Seal	335981	1	550-07
14	Rubber Washer	339044	1	525-16
15	Lower Crank Oil Seal	337085	1	550-03T
16	Upper Crank Seal	351082	1	550-18

New York • 1-800-222-3375
631-244-8060 • fax 631-244-0556
61 Floyd Run, Bohemia, NY 11716
Puerto Rico
787-832-2499 • fax 787-832-2939
234 Balboa St., Mayaquez, Puerto Rico 00681-2605
e-mail: info@wsmparts.com • www.wsmparts.com

Gasket Kits

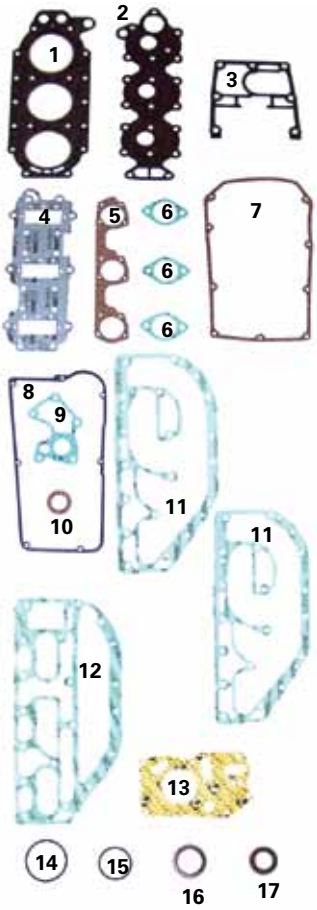

POWER HEAD GASKET KIT 3 CYL.

Kit No. 500-135 O.E. No. 390078

60 hp 1986-88, 65 hp 1972-86, 70 hp 1974-85, 75 hp 1975-89

INDIVIDUAL GASKETS/SEALS

Item #	Description	O.E. No.	Qty.	Part No.
1	Head Gasket	313413	1	505-05
2	Head Cover	318609	1	505-06
3	Base Gasket	328618	1	510-05
4	Intake Gasket	326926	1	515-10
5	Carb. to Air Box	333008	1	515-11
6	Carb. Gasket	325092	3	007-494
7	Air Silencer Gasket	321794	1	515-12
8	Base to Cover	314322	1	515-14
9	Thermostat Gasket	332108	1	515-16
10	Thermostat Gasket	313416	1	515-17
11	Exhaust Cover	331916	2	520-15
12	Exhaust Cover	331917	1	520-16
13	Megaphone Gasket	330984	1	520-18
14	Upper Crank O-Ring	313754	1	525-03
15	Lower Crank O-Ring	308876	1	008-641
16	Upper Crank Seal	321895	1	550-02
17	Lower Crank Seal	331103	1	550-04T

POWER HEAD GASKET KIT 3 CYL. LATE

Kit No. 500-136 O.E. No. 438904

50-70hp 3Cyl With 3.187 Bore

INDIVIDUAL GASKETS/SEALS

Item #	Description	O.E. No.	Qty.	Part No.
1	Head Gasket	329836	1	505-07
2	Base Gasket	329828	1	510-06
3	Intake Gasket	326926	1	515-10
4	Carb. to Air Box	333008	1	515-11
5	Carb. Gasket	325092	3	007-494
6	Air Silencer	321794	1	515-12
7	Thermostat Seat	320880	1	515-18
8	Thermostat Gasket	329830	1	515-19
9	Exhaust Gasket	343863	1	520-17
10	Megaphone Gasket	330984	1	520-18
11	Upper Crank O-Ring	308876	1	525-03
12	Lower Crank O-Ring	308876	1	008-641
13	Crank O-Ring	310585	1	525-08
14	Upper Crank Seal	321895	1	550-02
15	Lower Crank Seal	331103	1	550-04T

PRECISION
Arizona • 1-800-977-1414
480-966-1550 • fax 480-966-1565
16441 N. 91St. Suite 105 Scottsdale, AZ 85260
Florida • 1-866-417-4072
941-238-0960 • fax 941-238-0965
1899 60th Place East, Bradenton, FL 34203
e-mail: info@wsmparts.com • www.wsmparts.com
VISA MasterCard AMERICAN EXPRESS DISCOVER NOVUS

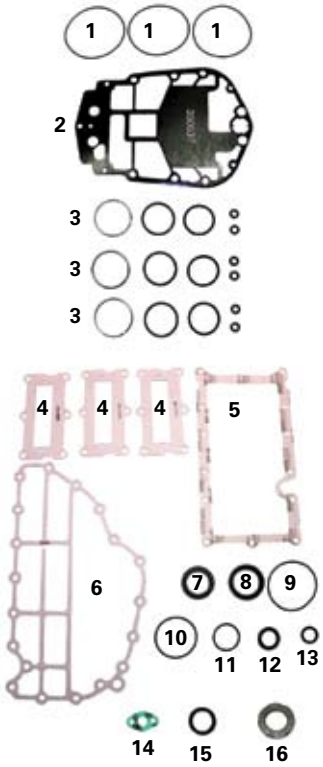

POWER HEAD GASKET KIT 3 CYL. E-TEC

Kit No. 500-137-01

75-90 hp E-Tec 2004-2007

INDIVIDUAL GASKETS/SEALS

Item #	Description	O.E. No.	Qty.	Part No.
1	Head O-Ring	335523	3	505-55
2	Base Gasket	351537	1	510-17
3	Injector Kit	5007017	3	600-160
4	Reed Gaskets	352743	2	515-49
5	Throttle Body to Reed Plate	350496	1	515-51
6	Exhaust Gasket	350594	1	520-30
7	Lower Crank Oil Seal	337085	1	550-03T
8	Upper Crank Oil Seal	351082	1	550-18
9	Lower End Cap O-Ring	338518	1	525-11
10	Thermostat Cover O-Ring	331188	1	525-12
11	Valve O-Ring	314728/354731	1	526-13
12	O-Ring	337087	1	525-03-01
14	Air Temp Sensor Gasket	350805	1	007-537-01
15	Plunger To Crankcase Grommet	347245	1	525-17
16	Thermo Seal	335981	1	550-07

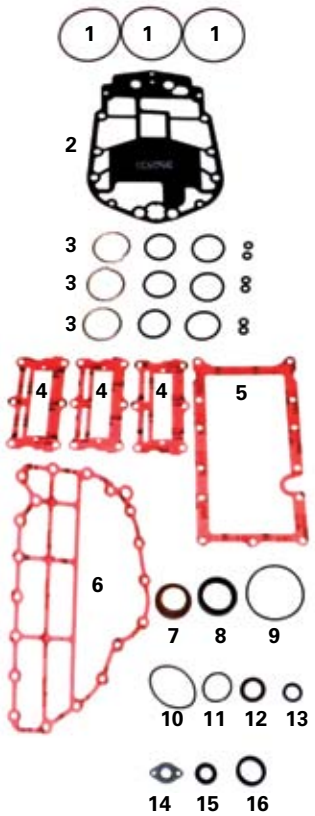

POWER HEAD GASKET KIT 3 CYL. E-TEC

Kit No. 500-137 O.E. No. 5005931

75-90 hp E-Tec 2008 & up

INDIVIDUAL GASKETS/SEALS

Item #	Description	O.E. No.	Qty.	Part No.
1	Head O-Ring	335523	3	505-55
2	Base Gasket	350537	1	510-17
3	Injector Kit	5007017	3	600-160
4	Reed Gaskets	350553, 352743	3	515-50
5	Throttle body to Reed Plate	350496	1	515-51
6	Exhaust Gasket	350594	1	520-30
7	Lower Crank Oil Seal	337085	1	550-03T
8	Upper Crank Oil Seal	351082	1	550-18
9	Lower End Cap O-Ring	338518	1	525-11
10	Valve O-Ring	314728, 354731	1	526-13
11	Thermostat Cover O-Ring	331188	1	525-12
12	O-Ring	337087	1	525-03-01
13	Rubber Washer	339044	1	525-16
14	Air Temp Sensor Gasket	350805	1	007-537-01
15	Thermo Seal	335981	1	550-07
16	Plunger to Crank case Grommet	347245	1	525-17

New York • 1-800-222-3375
631-244-8060 • fax 631-244-0556
61 Floyd Run, Bohemia, NY 11716
Puerto Rico
787-832-2499 • fax 787-832-2939
234 Balboa St., Mayaquez, Puerto Rico 00681-2605
e-mail: info@wsmparts.com • www.wsmparts.com

Gasket Kits

POWER HEAD GASKET KIT V4 CROSS FLOW

Kit No. 500-130

85 hp 1979-95, 88 hp 1987& up, 90 hp 1981-94, 100 hp 1979 & up, 110 hp 1986-90, 115 hp 1978 & up, 140 hp 1978 -84

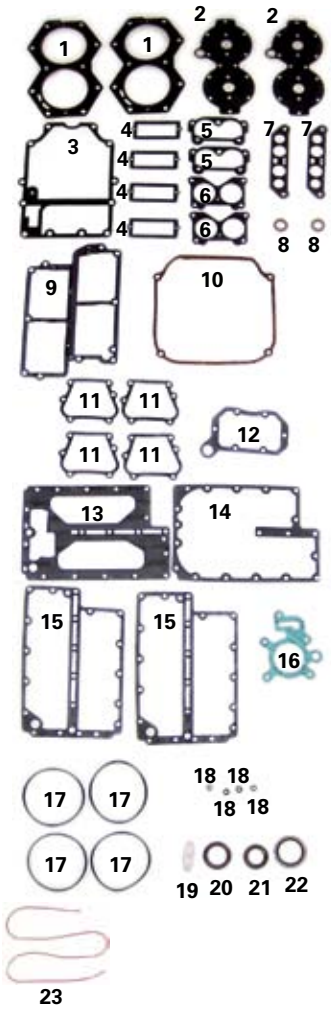

INDIVIDUAL GASKETS/SEALS

Item #	Description	O.E. No.	Qty.	Part No.
1	Head Gasket	318358	2	505-08
2	Head Cover	318335	2	505-09
3	Base Gasket	342513	1	510-07
4	Reed Gasket	321907	4	515-01
5	Carb. to Silencer	319771	2	515-02
6	Carb. to Silencer	327707	2	515-03
7	Thermostat Gasket	332369	2	515-20
8	Thermostat Gasket	303355	1	515-21
9	Intake Gasket	319174	1	515-22
10	Air Silencer	321722	1	515-23
11	Bypass Cover	307133	4	520-02
12	Water Passage	317951	1	520-09
13	Exhaust Gasket	323469	1	520-20
14	Exhaust Plate	317955	1	520-21
15	Exhaust Cover	317914	2	520-22
16	Inner Exhaust	323459	1	520-23
17	Crank Cap O-Ring	305123	4	525-02
18	O-Rings	332585	4	525-05
19	Fuel Pump Mount	303615	1	540-02
20	Oil Seal	337085	1	550-03T
21	Lower Crank Seal	331103	1	550-04T
22	Upper Crank Seal	339620	1	550-05
23	Spaghetti Seal		1	541-13

POWER HEAD GASKET KIT V4 LOOPER SMALL BORE

Kit No. 500-131 O.E. No. 396750

120 hp 1985-1987, 125 hp 1985-1987, 130 hp 1985-1987, 140 hp 1985-1987

INDIVIDUAL GASKETS/SEALS

Item #	Description	O.E. No.	Qty.	Part No.
1	Head Gasket	328623	2	505-17
2	Base Gasket	328590	1	510-08
3	Thermostat Seat	320880	2	515-18
4	Thermostat Gasket	329830	2	515-19
5	Thermostat Diaphram	394408	2	540-05
6	Intake Gasket	328622	1	515-24
7	Air Box Gasket	331101	1	515-25
8	Throttle Body	332319	2	515-26
9	Reed Gasket	328626	4	515-27
10	Reed Box	332266	4	515-28
11	End Cap O-Ring	326741	4	525-04
12	O-Rings	332585	4	525-05
13	Rectifier Gasket	344472	1	540-03
14	Upper Crank Seal	336232	1	550-05
15	Lower Crank Seal	332942	1	550-06T

PRECISION
Arizona • 1-800-977-1414
480-966-1550 • fax 480-966-1565
16441 N. 91St. Suite 105 Scottsdale, AZ 85260
Florida • 1-866-417-4072
941-238-0960 • fax 941-238-0965
1899 60th Place East, Bradenton, FL 34203
e-mail: info@wsmparts.com • www.wsmparts.com
VISA MasterCard AMERICAN EXPRESS DISCOVER NOVUS

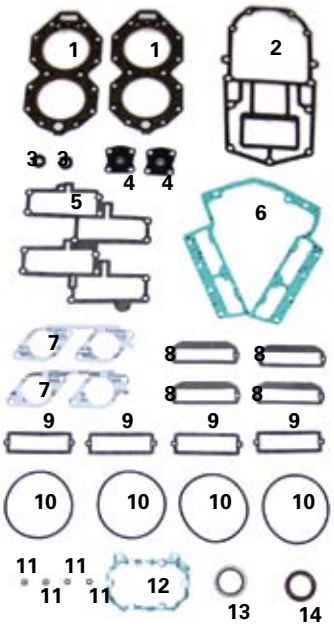

POWER HEAD GASKET KIT V4 LOOPER BIG BORE

Kit No. 500-132 O.E. No. 432570

120-140hp Big Bore 3.685

INDIVIDUAL GASKETS/SEALS

Item #	Description	O.E. No.	Qty.	Part No.
1	Head Gasket	340115	2	505-10
2	Base Gasket	328590	1	510-08
3	Thermostat Seat	320880	2	515-18
4	Thermostat Diaphram	394408	2	540-05
5	Intake Gasket	328622	1	515-24
6	Air Box Gasket	331101	1	515-25
7	Throttle Body	332319	2	515-26
8	Reed Gasket	328626	4	515-27
9	Reed Box	332266	4	515-28
10	End Cap O-Ring	326741	4	525-04
11	O-Rings	332585	4	525-05
12	Rectifier Gasket	344472	1	540-03
13	Upper Crank Seal	336232	1	550-05
14	Lower Crank Seal	332942	1	550-06T

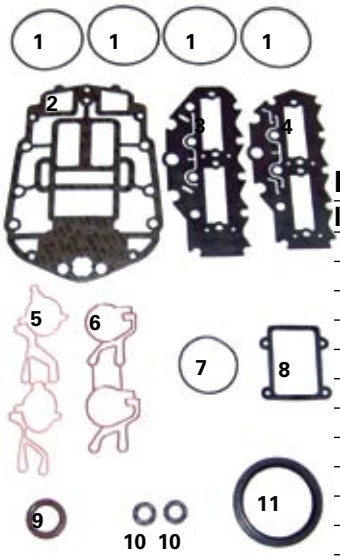

POWER HEAD GASKET KIT
V4 60 DEGREE EAGLE SERIES CARBURETED

Kit No. 500-133 O.E. No. 437779

90 hp 1995-00, 115 hp 1995-00

INDIVIDUAL GASKETS/SEALS

Item #	Description	O.E. No.	Qty.	Part No.
1	Head O-Ring	335523	4	505-55
2	Base Gasket	343853	1	510-15
3	Intake (Port)	336388	1	515-35
4	Intake (Stbd.)	336389	1	515-36
5	Intake (Port.)	335818	1	515-37
6	Intake (Stbd.)	335819	1	515-38
7	Crank Cap O-Ring	338518	1	525-11
8	Regulator Gasket	342291	1	540-07
9	Lower Seal	337085	1	550-03T
10	Thermo Seal	335981	2	550-07
11	Upper Seal	336232	1	550-12

New York • 1-800-222-3375
631-244-8060 • fax 631-244-0556
61 Floyd Run, Bohemia, NY 11716
Puerto Rico
787-832-2499 • fax 787-832-2939
234 Balboa St., Mayaquez, Puerto Rico 00681-2605
e-mail: info@wsmparts.com • www.wsmparts.com

Gasket Kits

POWER HEAD GASKET KIT
V4 60 DEGREE FFI FICHT

Kit No. 500-134 O.E. No. 5000400

90 hp 1995 & up, 115 hp 1995 & up

INDIVIDUAL GASKETS/SEALS

Item #	Description	O.E. No.	Qty.	Part No.
1	Head O-Ring	335523	4	505-55
2	Base Gasket	343853	1	510-15
3	Intake (Port)	336388	1	515-35
4	Intake (Stbd.)	336389	1	515-36
5	Intake	344526	2	515-39
6	Lower End Cap O-Ring	338518	1	525-11
7	Regulator Gasket	342291	1	540-07
8	Lower Crank Seal	337085	1	550-03T
9	Thermo Seal	335981	2	550-07
10	Upper Crank Seal	336232	1	550-12

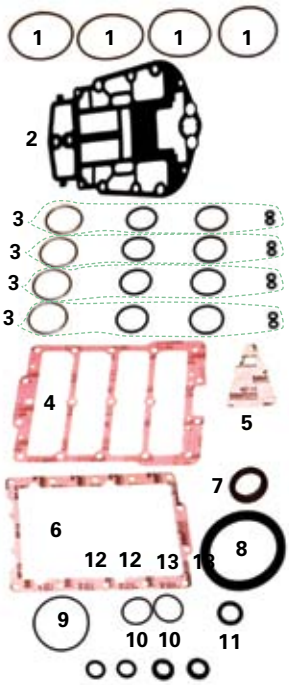

POWER HEAD GASKET KIT
V4 E-TEC

Kit No. 500-138 O.E. No. 5007850

115-130 hp 2007 & up

INDIVIDUAL GASKETS/SEALS

Item #	Description	O.E. No.	Qty.	Part No.
1	Head O-Ring	335523	4	505-55
2	Base Gasket	0354135	1	510-18
3	Injector Kit	5007017	4	600-160
4	Reed Block Gasket	351372	1	515-52
5	Water Cover Gasket	351970	1	520-12
6	Throttle Body to Reed Plate	351371	1	515-53
7	Lower Crank Oil Seal	337085	1	550-03T
8	Upper Crank Oil Seal	335981	1	550-12
9	Lower End Cap O-ring	338518	1	525-11
10	Thermostat Cover O-Ring	331188	2	525-12
11	O-Ring	337087	1	525-03-01
12	Rubber Washer	339044	2	525-16
13	Thermo Seal	335981	2	550-07

PRECISION
Arizona • 1-800-977-1414
480-966-1550 • fax 480-966-1565
16441 N. 91St. Suite 105 Scottsdale, AZ 85260
Florida • 1-866-417-4072
941-238-0960 • fax 941-238-0965
1899 60th Place East, Bradenton, FL 34203
e-mail: info@wsmparts.com • www.wsmparts.com
VISA MasterCard AMERICAN EXPRESS DISCOVER NOVUS

Gasket Kits

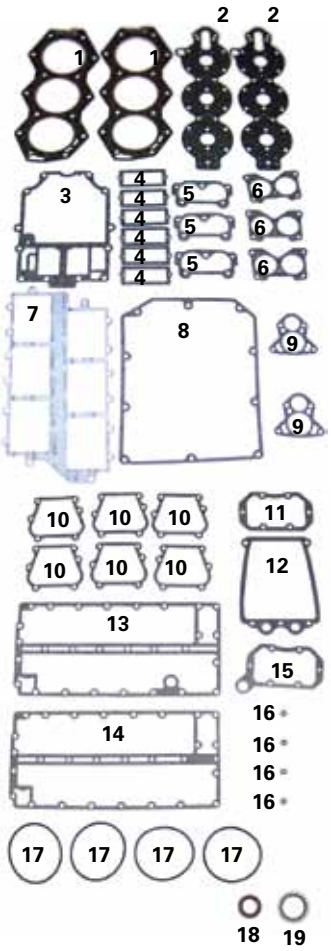

POWER HEAD GASKET KIT V6 CROSS FLOW

Kit No. 500-140 O.E. No. 391988

150 hp 1978-92, 155 hp 1978-92, 175 hp 1977-83, 185 hp 1984-85, 200 hp 1976-83, 235 hp 1978-79, 2.5 Liter 1982-85

INDIVIDUAL GASKETS/SEALS

Item #	Description	O.E. No.	Qty.	Part No.
1	Head Gasket	335360	2	505-01
2	Head Cover	321028	2	505-02
3	Base Gasket	335503	1	510-01
4	Reed Gasket	321907	6	515-01
5	Carb. Silencer Gasket	319771	3	515-02
6	Carb. Gasket	327707	3	515-03
7	Intake Manifold	329718	1	515-04
8	Air Box Gasket	321183	1	515-05
9	Thermostat Cover	321184	2	520-01
10	Bypass Cover	307133	6	520-02
11	Regulator Gasket	322858	1	520-03
12	Exhaust Gasket	325222	1	520-04
13	Exhaust Plate	321182	1	520-07
14	Exhaust Plate	321435	1	520-08
15	Regulator Gasket	317951	1	520-09
16	O-Rings	332585	4	525-05
17	Crank Cap O-Ring	305123	4	525-02
18	Lower Crank Seal	331103	1	550-04T
19	Upper Crank Seal	339620	1	550-05

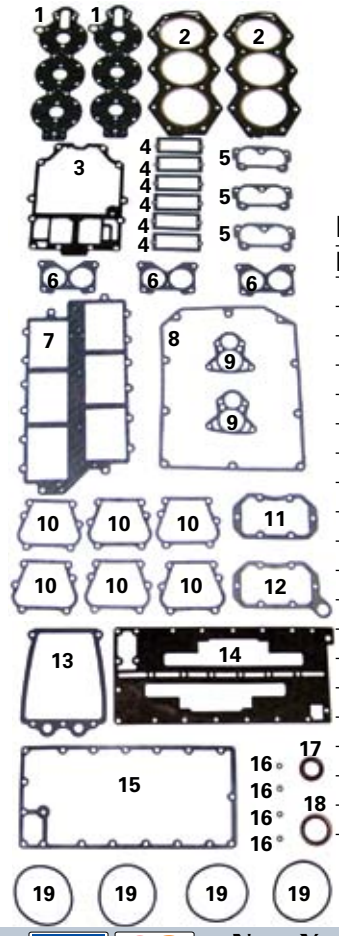

POWER HEAD GASKET KIT V6 XFLOW BIG BORE

Kit No. 500-141 O.E. No. 434381

175 hp 1986-91, 235 hp 1980-85, 2.6 liter 1982-86

INDIVIDUAL GASKETS/SEALS

Item #	Description	O.E. No.	Qty.	Part No.
1	Head Cover	321028	2	505-02
2	Head Gasket	335361	2	505-03
3	Base Gasket	335503	1	510-01
4	Reed Gasket	321907	6	515-01
5	Carb. Silencer Gasket	319771	3	515-02
6	Carb. Gasket	327707	3	515-03
7	Intake Manifold	329718	1	515-04
8	Air Box Gasket	321183	1	515-05
9	Thermostat Cover	321184	2	520-01
10	Bypass Cover	307133	6	520-02
11	Regulator Gasket	322858	1	520-03
12	Regulator Gasket	317951	1	520-09
13	Exhaust Gasket	325222	1	520-04
14	Exhaust Cover	393561	1	520-05
15	Exhaust Cover	336430	1	520-06
16	End Cap Bolt O-Rings	332585	4	525-05
17	Lower Crank Seal	331103	1	550-04T
18	Upper Crank Seal	339620	1	550-05
19	Crank Cap O-Ring	305123	4	525-02

VISA MasterCard AMERICAN EXPRESS DISCOVER NOVUS
New York • 1-800-222-3375
631-244-8060 • fax 631-244-0556
61 Floyd Run, Bohemia, NY 11716
Puerto Rico
787-832-2499 • fax 787-832-2939
234 Balboa St., Mayaquez, Puerto Rico 00681-2605
e-mail: info@wsmparts.com • www.wsmparts.com
WSM PERFORMANCE PARTS

Gasket Kits

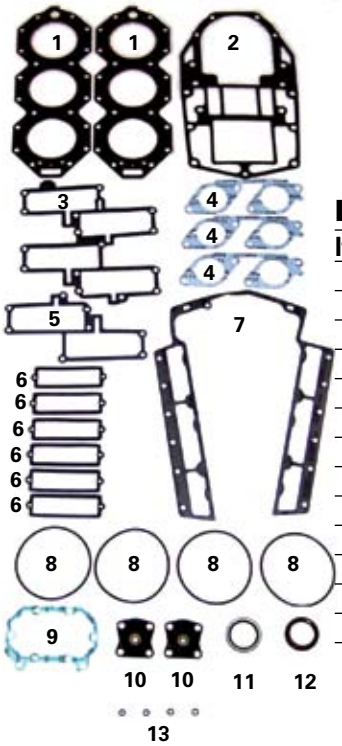

POWER HEAD GASKET KIT V6 SMALL BORE

Kit No. 500-144 O.E. No. 398172

INDIVIDUAL GASKETS/SEALS

Item #	Description	O.E. No.	Qty.	Part No.
1	Head Gasket	331211	2	505-14
2	Base Gasket	333879	1	510-09
3	Intake Gasket	328622	1	515-24
4	Throttle Body	332319	3	515-26
5	Intake Gasket	331532	1	515-29
6	Reed Box	332266	6	515-28
7	Air Box Gasket	331598	1	515-30
8	End Cap O-Ring	326741	4	525-04
9	Rectifier Gasket	344472	1	540-03
10	Thermostat Diaphram	394408	2	540-05
11	Upper Crank Seal	339620	1	550-05
12	Lower Crank Seal	332942	1	550-06T
13	End Cap O-Rings	332585	4	525-05

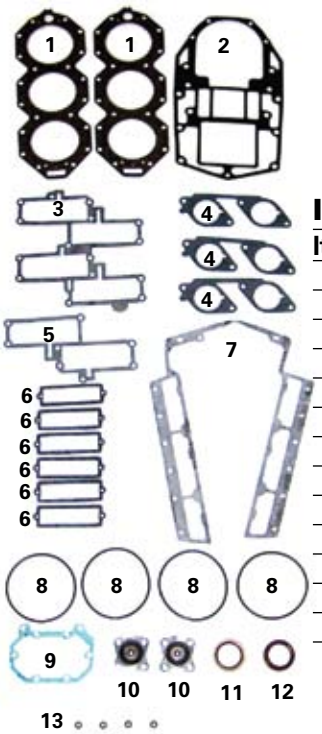

POWER HEAD GASKET KIT V6 BIG BORE LOOPER EARLY

Kit No. 500-145 O.E. No. 436891

200 hp 1988-92, 3.0 liter 1988-90, 225 hp 1988-92

INDIVIDUAL GASKETS/SEALS

Item #	Description	O.E. No.	Qty.	Part No.
1	Head Gasket	334726	2	505-12
2	Base Gasket	333879	1	510-09
3	Intake Gasket	328622	1	515-24
4	Throttle Body Gasket	332319	3	515-26
5	Intake Gasket	331532	1	515-29
6	Intake Gasket	332266	6	515-28
7	Air Box Gasket	331598	1	515-30
8	Crank Cap O-Ring	326741	4	525-04
9	Rectifier Gasket	344472	1	540-03
10	Thermostat Diaphram	394408	2	540-05
11	Upper Crank Seal	339620	1	550-05
12	Lower Crank Oil Seal	332942	1	550-06T
13	End Cap O-Rings	332585	4	525-05

PRECISION
Arizona • 1-800-977-1414
480-966-1550 • fax 480-966-1565
16441 N. 91St. Suite 105 Scottsdale, AZ 85260
Florida • 1-866-417-4072
941-238-0960 • fax 941-238-0965
1899 60th Place East, Bradenton, FL 34203
e-mail: info@wsmparts.com • www.wsmparts.com
VISA MasterCard AMERICAN EXPRESS DISCOVER NOVUS

Gasket Kits

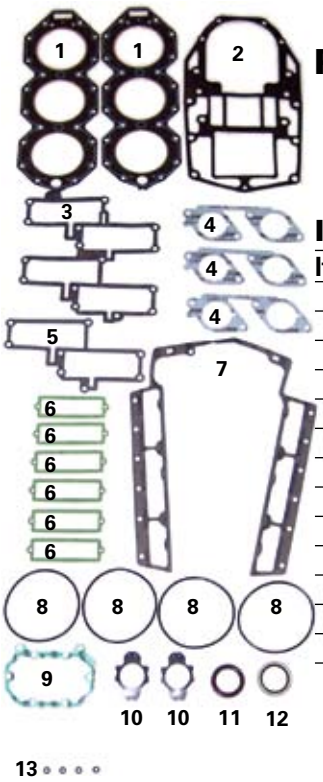

POWER HEAD GASKET KIT V6 BIG BORE LOOPER LATE & 3.0 LITER FFI EARLY

Kit No. 500-146 O.E. No. 437725

200 hp 1993 & up, 225 hp 1993 & up, 250 hp w / carb.

INDIVIDUAL GASKETS/SEALS

Item #	Description	O.E. No.	Qty.	Part No.
1	Head Gasket	340919	2	**505-13**
2	Base Gasket	333879	1	**510-09**
3	Intake Gasket	328622	1	**515-24**
4	Throttle Body Gasket	332319	3	**515-26**
5	Intake Gasket	331532	1	**515-29**
6	Intake Gasket	332266	6	**515-28**
7	Air Box Gasket	331598	1	**515-30**
8	Crank Cap O-Ring	326741	4	**525-04**
9	Rectifier Gasket	344472	1	**540-03**
10	Thermostat Gasket	337068	2	**540-04**
11	Lower Crank Oil Seal	332942	1	**550-06T**
12	Upper Crank Seal	339620	1	**550-05**
13	Lower Bearing Bolts O-Rings	332585	4	**525-05**

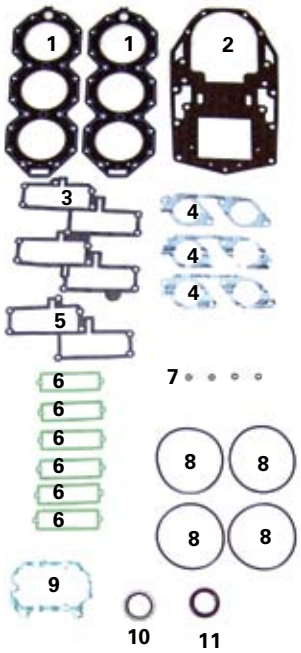

POWER HEAD GASKET KIT V6 3.0 LITER FFI LATE

Kit No. 500-146-01

1999-2001 3.685 Bore

INDIVIDUAL GASKETS/SEALS

Item #	Description	O.E. No.	Qty.	Part No.
1	Head Gasket	340919	2	**505-13**
2	Base Gasket	333879	1	**510-09-01**
3	Intake Gasket	328622	1	**515-24**
4	Throttle Body Gasket	332319	3	**515-26**
5	Intake Gasket	331532	1	**515-29**
6	Intake Gasket	332266	6	**515-28**
7	End Cap O-Rings	332585	4	**525-05**
8	Crank Cap O-Ring	326741	4	**525-04**
9	Rectifier Gasket	344472	1	**540-03**
10	Upper Crank Seal	339620	1	**550-05**
11	Lower Crank Oil Seal	332942	1	**550-06T**

New York • 1-800-222-3375
631-244-8060 • fax 631-244-0556
61 Floyd Run, Bohemia, NY 11716
Puerto Rico
787-832-2499 • fax 787-832-2939
234 Balboa St., Mayaquez, Puerto Rico 00681-2605
e-mail: info@wsmparts.com • www.wsmparts.com
WSM PERFORMANCE PARTS

Gasket Kits

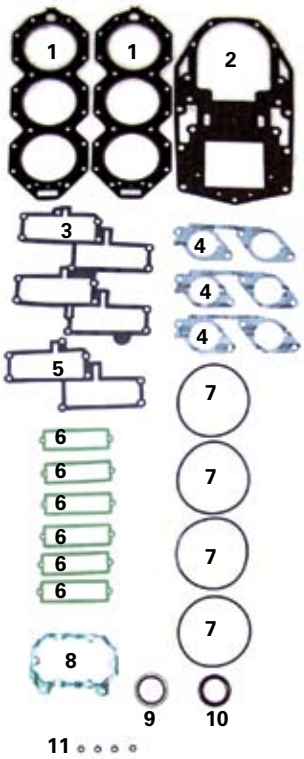

POWER HEAD GASKET KIT V6 3.3 LITER FFI

Kit No. 500-146-02 O.E. No. 787131

2000-2004 V6 3.3 Liter FFI 3.845 Bore

INDIVIDUAL GASKETS/SEALS

Item #	Description	O.E. No.	Qty.	Part No.
1	Head Gasket	346007	2	**505-13-01**
2	Base Gasket	333879	1	**510-09-01**
3	Intake Gasket	328622	1	**515-24**
4	Throttle Body Gasket	332319	3	**515-26**
5	Intake Gasket	331532	1	**515-29**
6	Intake Gasket	332266	6	**515-28**
7	Crank Cap O-Ring	326741	4	**525-04**
8	Rectifier Gasket	344472	1	**540-03**
9	Upper Crank Seal	339620	1	**550-05**
10	Lower Crank Oil Seal	332942	1	**550-06T**
11	Lower Bearing Bolts O-Rings	332585	4	**525-05**

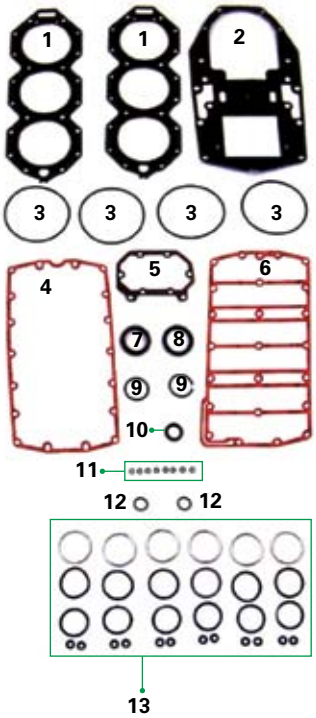

POWER HEAD GASKET KIT V6 3.3 LITER E-TEC

Kit No. 500-146-03 O.E. No. 5006342

200, 225, 250 hp 2005 & up

INDIVIDUAL GASKETS/SEALS

Item #	Description	O.E. No.	Qty.	Part No.
1	Head Gasket	346007	2	**505-13-01**
2	Base Gasket	351535	1	**510-09-02**
3	OMC Looper End Cap O-Ring	326741	4	**525-04**
4	Throttle Body Gasket	350933	1	**515-48**
5	OMC V4-V6 Looper Rectifier Gasket (New Style)	330412	1	**540-03**
6	Reed Gasket	350934	1	**515-47**
7	OMC V4 Upper Crank Seal	339620	1	**550-05**
8	OMC Looper Lower Crank Seal	332942	1	**550-06T**
9	Thermostat O-Ring	301917	2	**525-14**
10	O-Ring Crankshaft	337087	1	**525-03-01**
11	Hex O-Ring	332585	8	**525-05-01**
12	Thermostat Seal O-Ring	339299	2	**525-15**
13	Fuel Injector O-ring Kit	5007017	6	**600-160**

PRECISION
Arizona • 1-800-977-1414
480-966-1550 • fax 480-966-1565
16441 N. 91St. Suite 105 Scottsdale, AZ 85260
Florida • 1-866-417-4072
941-238-0960 • fax 941-238-0965
1899 60th Place East, Bradenton, FL 34203
e-mail: info@wsmparts.com • www.wsmparts.com
VISA MasterCard AMERICAN EXPRESS DISCOVER NOVUS

POWER HEAD GASKET KIT
V6 3.4 LITER E-TEC

Kit No. 500-146-04 O.E. No. 5007698

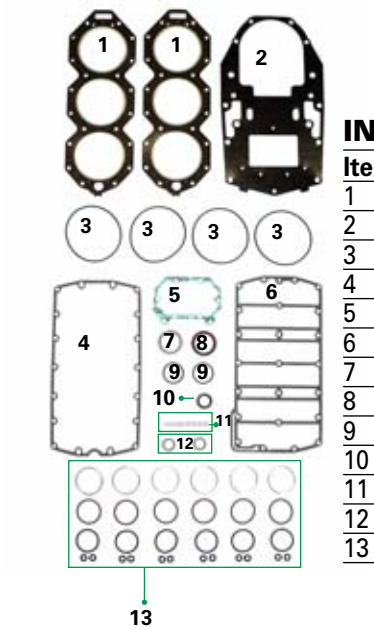

INDIVIDUAL GASKETS/SEALS

Item #	Description	O.E. No.	Qty.	Part No.
1	Head Gasket	0346007	2	505-13-01
2	Base Gasket	0353224	1	510-09-03
3	End Cap O-Ring	0326741	4	525-04
4	Throttle Body Gasket	0350933	1	515-48
5	Rectifier Gasket	0344472	1	540-03
6	Reed Gasket	0350934	1	515-47
7	Upper Crank Seal	0339620	1	550-05
8	Lower Crank Seal	0353076	1	550-06T
9	Thermostat Cover O-Ring	0301917	2	525-14
10	Crank Shaft O-Ring	0337087	1	525-03-01
11	Hex O-Ring	0332585	8	525-05-01
12	Thermostat Seal O-Ring	0339299	2	525-15
13	Fuel Injector Repair Kit	5007017	6	600-160

POWER HEAD GASKET KIT
V6 60 DEGREE CARBURETED

Kit No. 500-147 O.E. No. 437155

150 hp 91-00, 175 hp 91-00

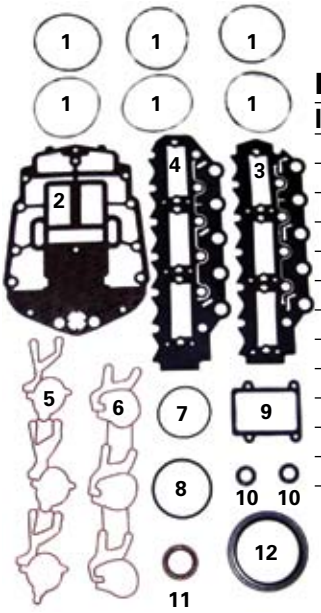

INDIVIDUAL GASKETS/SEALS

Item #	Description	O.E. No.	Qty.	Part No.
1	Head O-Rings	335523	6	505-55
2	Base Gasket	335419	1	510-16
3	Port Intake Gasket	336226	1	515-40
4	Stbd. Intake Gasket	336227	1	515-41
5	Portside Intake	335403	1	515-42
6	Stbd. Intake Gasket	335404	1	515-43
7	Lower End Cap O-Ring	338518	1	525-11
8	Lower End Cap O-Ring	335524	1	525-13
9	Regulator Gasket	342291	1	540-07
10	Thermo Seal	335981	2	550-07
11	Lower Crank Seal	337085	1	550-03T
12	Upper Crank Seal	336232	1	550-12

New York • 1-800-222-3375
631-244-8060 • fax 631-244-0556
61 Floyd Run, Bohemia, NY 11716
Puerto Rico
787-832-2499 • fax 787-832-2939
234 Balboa St., Mayaquez, Puerto Rico 00681-2605
e-mail: info@wsmparts.com • www.wsmparts.com

Gasket Kits

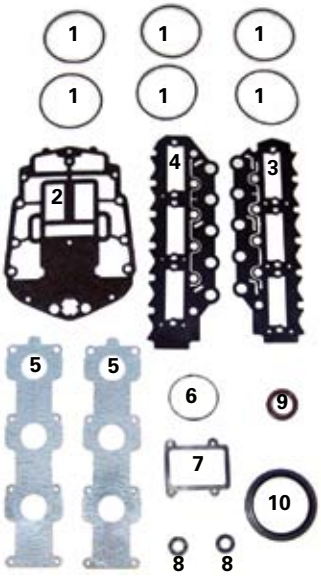

POWER HEAD GASKET KIT
V6 60 DEGREE FFI

Kit No. 500-150 O.E. No. 439202

135, 150 hp, 175 hp

INDIVIDUAL GASKETS/SEALS

Item #	Description	O.E. No.	Qty.	Part No.
1	Head O-Rings	335523	6	505-55
2	Base Gasket	335419	1	510-16
3	Intake (Port)	336226	1	515-40
4	Intake (Stbd.)	336227	1	515-41
5	Intake Gasket	344335	2	515-45
6	Lower End Cap O-Ring	338518	1	525-11
7	Regulator Gasket	342291	1	540-07
8	Thermo Seal	335981	2	550-07
9	Lower Crank Seal	337085	1	550-03T
10	Upper Crank Seal	336232	1	550-12

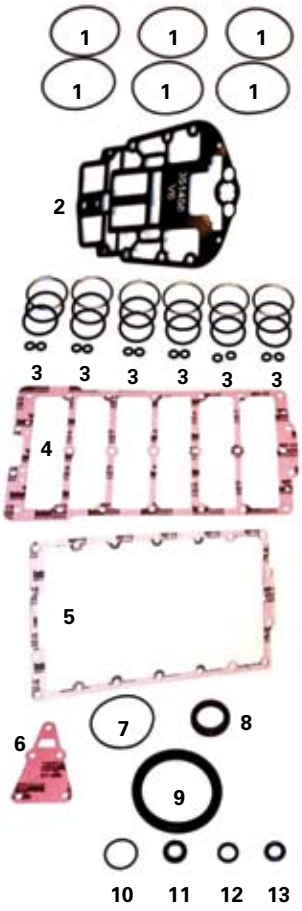

POWER HEAD GASKET KIT V6 E-TEC

Kit No. 500-153 O.E. No. 5007129

150-200 HP

INDIVIDUAL GASKETS/SEALS

Item #	Description	O.E. No.	Qty.	Part No.
1	Head O-Ring	335523	6	505-55
2	Base Gasket	351458	1	510-19
3	Injector Kit	5007017	6	600-160
4	Reed Block Gasket	351366	1	515-54
5	Throttle Body to Reed Plate	352607	1	515-55
6	Water Cover Gasket	351970	1	520-12
7	Lower End Cap O-ring	338518	1	525-11
8	Lower Crank Oil Seal	337085	1	550-03T
9	Upper Crank Oil Seal	335981	1	550-12
10	Thermostat Cover O-Ring	331188	1	525-12
11	Thermo Seal	335981	1	550-07
12	Rubber Washer	339044	2	525-16
13	O-Ring	337087	1	525-03-01

PRECISION
Arizona • 1-800-977-1414
480-966-1550 • fax 480-966-1565
16441 N. 91St. Suite 105 Scottsdale, AZ 85260
Florida • 1-866-417-4072
941-238-0960 • fax 941-238-0965
1899 60th Place East, Bradenton, FL 34203
e-mail: info@wsmparts.com • www.wsmparts.com
VISA MasterCard AMERICAN EXPRESS DISCOVER NOVUS

Gasket Kits

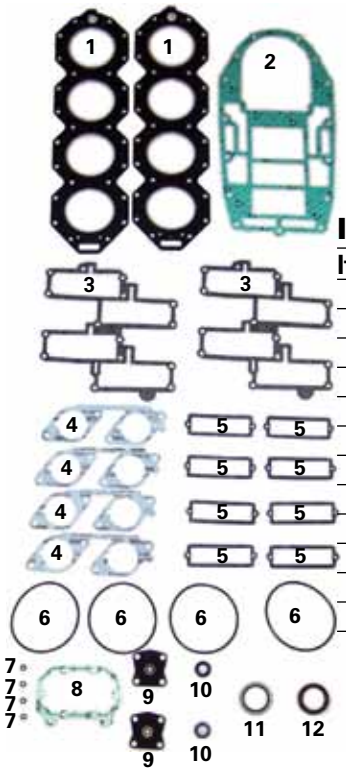

POWER HEAD GASKET KIT SMALL BORE V8

Kit No. 500-151 O.E. No. 398355

275/300 HP 3.6 Liter 1985-87

INDIVIDUAL GASKETS/SEALS

Item #	Description	O.E. No.	Qty.	Part No.
1	Head Gasket	329786	2	505-19
2	Base Gasket	329975	1	510-12
3	Intake Gasket	328622	2	515-24
4	Throttle Body Gasket	332319	4	515-26
5	Intake Gasket	332266	8	515-28
6	Crank Cap O-Ring	326741	4	525-04
7	End Cap Bolt O-Rings	332585	4	525-05
8	Rectifier Gasket	344472	1	540-03
9	Thermostat Seat	320880	2	515-18
10	Thermostat Diaphram	394408	2	540-05
11	Upper Crank Seal	336232	1	550-05
12	Lower Crank Seal	332942	1	550-06T

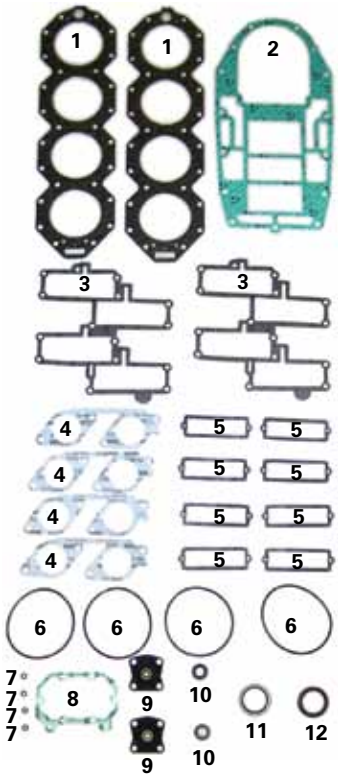

POWER HEAD GASKET KIT BIG BORE V8

Kit No. 500-152 O.E. No. 398693

250/300 HP 4.0 Liter 1990-93

INDIVIDUAL GASKETS/SEALS

Item #	Description	O.E. No.	Qty.	Part No.
1	Head Gasket	333554	2	505-20
2	Base Gasket	329975	1	510-12
3	Intake Gasket	328622	2	515-24
4	Throttle Body Gasket	332319	4	515-26
5	Intake Gasket	332266	8	515-28
6	Crank Cap O-Ring	326741	4	525-04
7	End Cap O-Rings	332585	4	525-05
8	Rectifier Gasket	344472	1	540-03
9	Thermostat Seat	320880	2	515-18
10	Thermostat Diaphram	394408	2	540-05
11	Upper Crank Seal	336232	1	550-05
12	Lower Crank Seal	332942	1	550-06T

New York • 1-800-222-3375
631-244-8060 • fax 631-244-0556
61 Floyd Run, Bohemia, NY 11716
Puerto Rico
787-832-2499 • fax 787-832-2939
234 Balboa St., Mayaquez, Puerto Rico 00681-2605
e-mail: info@wsmparts.com • www.wsmparts.com

WSM Oil Filters

Part No. 615-125
O.E. No. 434839
Fits: 9.9-15 95-01
70 Hp 98- 00

Part No. 615-140
O.E. No. 5031411, 0778885
Fits: 25-70 Hp

Part No. 615-130
O.E. No. 5033539, 0778886, 0778887
Fits: 90 / 115 Hp

Part No. 615-135
O.E. No. 5033539, 0778886
Fits: 140 Hp

Part No. 615-150
O.E. No. 5035703
Fits: 200-225 hp V6 04-06

Carburetor Kits

Picture Gallery

Part No. 600-30-01 without float
OE No. 390055, 392550, 398526, 435443, 434888

Part No. 600-31-01 without float
OE No. 396701

Part No. 600-33-01 without float
OE No. 398452, 391305, 398453, 439072, 391937

Part No. 600-36-01 without float
OE No. 439079

Part No. 600-38-01 without float
OE No. 437327

PRECISION
Arizona • 1-800-977-1414
480-966-1550 • fax 480-966-1565
16441 N. 91St. Suite 105 Scottsdale, AZ 85260
Florida • 1-866-417-4072
941-238-0960 • fax 941-238-0965
1899 60th Place East, Bradenton, FL 34203
e-mail: info@wsmparts.com • www.wsmparts.com

Carburetor Kits

Application Chart

Model/HP	Year	Cyl.	Carb. Kit without float
4	1991-93	2	**600-33-01**
4.5	1982-87	2	**600-33-01**
5	1984-85	2	**600-33-01**
6	1984-85	2	**600-33-01**
7.5	1982-83	2	**600-33-01**
8	1984-85	2	**600-33-01**
9	1974-88	2	**600-33-01**
15	1974-88	2	**600-33-01**
20	1969-90	2	**600-31-01**
25	1969-95	2	**600-31-01**
SAIL DR	1978-Up	2	**600-31-01**
28	1976-95	2	**600-31-01**
30	1976-UP	2	**600-31-01**
35	1976-95	2	**600-31-01**
40	1971-90	2	**600-31-01**
45	1971-97	2	**600-31-01**
48	1992-97	2	**600-31-01**
50	1971-97	2	**600-31-01**
55	1971-97	2	**600-31-01**
60	1970-97	4	**600-31-01**
65	1972-97	3	**600-31-01**
70	1972-97	3	**600-31-01**
75	1975-88	3	**600-31-01**
85	1971-93	4	**600-30-01**
V-4	1983-84	4	**600-30-01**
88,90	1985-95	4	**600-30-01**
90	1981-83	4	**600-30-01**
90 60 degree	1995 & UP	4	**600-32-01**

Model/HP	Year	Cyl.	Carb. Kit without float
100 X- Flow	1985-95	4	**600-30-01**
110	1985-90	4	**600-30-01**
115	1970-95	4	**600-30-01**
115 X-Flow	1995-02	4	**600-30-01**
V-6	1976-90	4	**600-30-01**
120 Looper	1985-93	4	**600-36-01**
120 Looper	1994 & Up	4	**600-38-01**
125	1971-72	4	**600-30-01**
125C	1989-95	4	**600-36-01**
135 X-Flow	1973-76	4	**600-36-01**
140 X-Flow	1977-83	4	**600-30-01**
140 X-Flow	1978-79	4	**600-30-01**
140 Looper	1985-93	4	**600-36-01**
140 Looper	1994 & Up	4	**600-38-01**
150 X-Flow	1979-90	6	**600-30-01**
155 X-Flow	1984-93	6	**600-30-01**
175 X-Flow	1977-91	6	**600-30-01**
185 X-Flow	1984	6	**600-30-01**
185 Looper	1989-93	6	**600-36-01**
200 X-Flow	1976-83	6	**600-30-01**
200 Looper	1985-93	6	**600-36-01**
200 Looper	1994 & Up	6	**600-38-01**
225 Looper	1986-93	6	**600-36-01**
225 Looper	1994 & Up	6	**600-38-01**
235 X-Flow	1978-84	6	**600-30-01**
250	1991-93	8	**600-36-01**
275\3.6L	1985-88	8	**600-36-01**
300	1988 & Up	8	**600-36-01**

E-Tec Fuel Injector Repair Kit

Part No. 600-160
O.E. No. 5007017

New York • 1-800-222-3375
631-244-8060 • fax 631-244-0556
61 Floyd Run, Bohemia, NY 11716
Puerto Rico
787-832-2499 • fax 787-832-2939
234 Balboa St., Mayaquez, Puerto Rico 00681-2605
e-mail: info@wsmparts.com • www.wsmparts.com

Fuel Pumps

Picture Gallery

FUEL PUMP

Part No. 600-111

90-140hp 4 Stroke, 2003-2006
O.E No. 5033702

FUEL PUMP

Part No. 600-111-01

O.E No. 5032617

FUEL PUMP

Part No. 600-157

25-55HP 1976-89 (non-VRO)

Replaces: 438556

FUEL PUMP

Part No. 600-157-01

9.9/15HP 1993-2001

Replaces: 438562

FUEL PUMP

Part No. 600-158

25-140hp, 1972-2005
O.E No. 438559

FUEL PUMP

Part No. 600-158-01

20-30HP 1990-2000

Replaces: 438555

FUEL PUMP

Part No. 600-159

6/8/9.9/15HP

1992 & older

Replaces: 397839

PRECISION
Arizona • 1-800-977-1414
480-966-1550 • fax 480-966-1565
16441 N. 91St. Suite 105 Scottsdale, AZ 85260
Florida • 1-866-417-4072
941-238-0960 • fax 941-238-0965
1899 60th Place East, Bradenton, FL 34203
e-mail: info@wsmparts.com • www.wsmparts.com

Primer Solenoid Parts

Primer Solenoid Kit
Part No. 600-500K
Contains: 18-0871,
600-505,600-510

PRIMER SOLENOID COVER W/O GASKET
Part No. 600-505
40-300 HP
OE: 341071

SOLENOID COVER GASKET
Part No. 600-510
40-300 HP
OE: 341297

Fuel

Water Separators

Part No. 600-446
10 Micron
O.E. No. 3852413, 0502906,
0987141, 0987228, 0987754
Fits: 75-300 HP

Part No. 600-444
10 Micron
O.E. No. 0502905, 305044,
0174144
Fits: 250-300 HP

For more fuel water separators see the universal section.

Fuel Filters

Part No. 600-273
O.E. No. 5040140
Fits: 4 E-R4/E-RL4 2013-2015
6 E-R4/E-RL4/E-RX4 13-15
9.9 2013
15 2013-2015

Part No. 600-311
O.E. No. 5035974
Fits: 25-140hp

Part No. 600-286
O.E. No. 5031400
Fits: 40 E-PL4 1999-2001
40 J-PL4 2002-2006
50 E-PL4 1999-2001
50 J-PL4 2002-2006

Part No.600-281
O.E. No. 5005266
Fits: 40-200 hp E-Tecs

Part No. 600-312
O.E. No. 433190
Fits: 90-115 hp V4 1995 &
up, 150-175HP V6 1991 & up

Inline Fuel Filters

Part No.	For
600-300	For 1/4" Hose
600-305	For 5/16" Hose
600-310	For 3/8" Hose

New York • 1-800-222-3375
631-244-8060 • fax 631-244-0556
61 Floyd Run, Bohemia, NY 11716
Puerto Rico
787-832-2499 • fax 787-832-2939
234 Balboa St., Mayaquez, Puerto Rico 00681-2605
e-mail: info@wsmparts.com • www.wsmparts.com

Drain Plug Gasket Kits

Part No.	Description	O.E. No.
555-01K	Drain Plug Gasket Assortment Kit Fits: Mercury, J/E, Yamaha, Suzuki, Nissan/Tohatsu	

Note: Kits Included 50 Pieces Of Each Gasket In Kit

Drain Plug Replacement Gaskets

Sold in packs of 50 Pieces

Part No.	Description	O.E. No.
555-11	Johnson Evinrude/Mercury	12-19183 / 307552
555-15	Johnson / Evinrude	311598
555-13	Nissan / Tohstsu	332600060M
555-14	Suzuki	09168-10022
555-12	Volvo	
555-10	Yamaha	90430-08020-00

Tilt Tubes

Aplication	Tillt Tube	Bushing	Washer
2 Cyl 1976-up	986-105	986-200	986-300
3&4 Cyl 1973-78	986-115	986-200	986-300
3, 4, & 6 Cyl OMC	986-160	986-210	986-305

Tilt Tubes	Tube Thickness	Tube Length	Short Threaded End	Long Threaded End	Thread Size
986-105	7/8"	12"	1-3/4"	1-3/4"	7/8" x 14
986-115	7/8"	13 1/4"	1-1/4"	2-1/4"	7/8" x 14
986-160	1"	12 1/8"	5/8"	1 3/8"	7/8" x 14

986-200

986-600

986-605

Tilt Tube Bushings	Inside Diameter	Length
986-200	7/8"	1"
986-205	1"	1"
986-210	1"	1-1/2"
Washers		
986-300	7/8"	
986-305	1"	
Tilt Tube Reamer		
986-600	3/8" Shank Diam	
Specialy ground OD to accommodate most Tilt Tubes. Made of high speed tool steel.		
Tilt Tube Brush		
986-605		

Tilt Tube Grease Nuts

CABLE GREASE NUT

Part No. 986-500

1" x 14 Pitch Thread Built in Grease seal with easy steer nuts, it lubricates and seals out moisture and salt water.

CABLE GREASE NUT

Part No. 986-505

7/8" x 14 Pitch Thread

CABLE NUT FOR CABLE SIDE

Part No. 986-510

7/8" X 14 Pitch Threads I.D. or O.D.

This nut injects oil directly onto cable.

PRECISION
Arizona • 1-800-977-1414
480-966-1550 • fax 480-966-1565
16441 N. 91St. Suite 105 Scottsdale, AZ 85260
Florida • 1-866-417-4072
941-238-0960 • fax 941-238-0965
1899 60th Place East, Bradenton, FL 34203
e-mail: info@wsmparts.com • www.wsmparts.com

Impellers

Impeller Only Picture Gallery

Part No. 700-250
O.E. No. 396809

Part No. 700-255
O.E. No. 432941, 437059

Part No. 700-265
O.E. No. 389576

Part No. 700-275
O.E. No. 375638, 775518

Part No. 700-285
O.E. No. 385528, 389642, 777212

Part No. 700-290
O.E. No. 386084

Part No. 700-295
O.E. No. 395289

Part No. 700-300
O.E. No. 396725

Part No. 700-310
O.E. No. 5001593

Part No. 700-320
O.E. No. 377230

Part No. 700-325
O.E. No. 387361, 763735

Part No. 700-505
O.E. No. 5033112
10/15 HP 4 Stroke

Part No. 700-515
O.E. No. 5031417
40-50 HP 4 Stroke

Part No. 700-520
O.E. No. 5030723
70 HP 4 Stroke

Part No. 700-525
O.E. No. 5033542
90-140HP, 4-Stroke

New York • 1-800-222-3375
631-244-8060 • fax 631-244-0556
61 Floyd Run, Bohemia, NY 11716
Puerto Rico
787-832-2499 • fax 787-832-2939
234 Balboa St., Mayaquez, Puerto Rico 00681-2605
e-mail: info@wsmparts.com • www.wsmparts.com

Impellers

Application Chart

HP	Year	Impeller
2 HP JR. COLT	85-90	700-325
4 HP	76-80	700-325
4 HP DELUXE	80-97	700-265
4.5	80-97	700-265
5 (4) STROKE	98-Up	700-265
6 HP	1979	700-325
6	84-97	700-265
6 (4) STROKE	98-UP	700-265
8 (2) STROKE	86-97	700-265
8 (4) STROKE	96-97	700-290
9.5	64-73	700-280
9.9 (4) STROKE	94-97	700-290
9.9 (2) STROKE	74-97	700-290
10	49-57	700-275
10/15 (4) STROKE	97-05	700-505
15/18	56-73	700-275
15	74-97	700-290
15 (4) STROKE	94-97	700-290
20	66-73	700-275
20	66-78	700-275
20	81-84	700-295
20	85-97	700-295
25	69-78	700-275
25	79-84	700-295
25C	83-91	700-295
25	85-97	700-295
25D	93-95	700-255
28	78-UP	700-295
28 JET	95-96	700-255
30	84-UP	700-295
35	78-79	700-295
35	80-82	700-295
35	83-UP	700-295
35 JET	92-93	700-255
40	60-70	700-320
40	84-85	700-515
40	86-88	700-250
40	89-98	700-255
40	98-UP	700-300
40-50 (4) STROKE		700-515
45/55	93-94	700-250
45/55 COMM.	85	700-515
45/55 COMM.	86-88	700-250
48	87-88	700-250
48	89-96	700-255
50	79-85	700-515
50	86-88	700-250
50	89-98	700-255
55	68-69	700-315
55	76-78	700-320
55	79-85	700-515
55C	93-94	700-250
60	70-71	700-315
60	86-94	700-300

HP	Year	Impeller
40,50,60 hp E-Tec	2006-Up	700-300
60	80-85	700-515
60 SST	89	700-300
60	95-UP	700-300
65	72-73	700-315
65C	84-94	700-300
65C	95-UP	700-300
65 JET	94	700-310
70	74-78	700-315
70	79-94	700-300
70	95-UP	700-300
75	74-78	700-315
75	79-88	700-300
1.6L	82-94	700-310
80 JET	93-96	700-310
85	1978	700-285
85	73-77	700-285
85	79-95	700-310
85 TTL	93-95	700-310
88	87-96	700-310
90	79-97	700-310
90,115,140 4 strokes	2003-2006	700-525
90 SL, DI	95-UP	700-310
100	79-97	700-310
100C	84-97	700-310
100/105 COMM.	98-01	700-310
105 JET	94-97	700-310
110	86-92	700-310
110	93-UP	700-310
112	94-96	700-310
115	73-76	700-285
115	77-78	700-285
115	79-UP	700-310
115 SL, DL	95-UP	700-310
120	85-94	700-310
120 25"	93-00	700-310
125	94-95	700-310
125 ESX 25"	93-94	700-310
130	97-UP	700-310
130 25"	94-00	700-310
135	73-75	700-285
135	1976	700-285
135 25"	2001	700-310
140	77-78	700-285
140	79-94	700-310
140 25"	94-00	700-310
150	76-78	700-285
150	79-97	700-310
150 20"	93-UP	700-310
150 EL 20"	96-98	700-310
150 SL 20"	94-98	700-310
150 25"	93-UP	700-310
150 DI	97-UP	700-310
150	2000-UP	700-310

HP	Year	Impeller
155	84-UP	700-310
175	76-78	700-285
175	79-97	700-310
175 EL 20"	96-98	700-310
175 SL 20"	94-98	700-310
175 DI	97-UP	700-310
175	2000-UP	700-310
185	84-94	700-310
200	76-78	700-285
200	79-97	700-310
200 COMM.	1990	700-310
200 25" & 30"	93-97	700-310
225 20"	93-UP	700-310
225 25" & 30"	93-97	700-310
235	1978	700-285
235	79-UP	700-310
250	93-95	700-310
275	85-UP	700-310
300/3.6L	85-95	700-310
2.3L	82-94	700-310
V4 LOOP 20	93-UP	700-310
V4-V8	82-94	700-310
V6-V8 20"	93-UP	700-310
V6-V8 25" 30"	93-UP	700-310

PRECISION
Arizona • 1-800-977-1414
480-966-1550 • fax 480-966-1565
16441 N. 91St. Suite 105 Scottsdale, AZ 85260
Florida • 1-866-417-4072
941-238-0960 • fax 941-238-0965
1899 60th Place East, Bradenton, FL 34203
e-mail: info@wsmparts.com • www.wsmparts.com
VISA MasterCard AMERICAN EXPRESS DISCOVER NOVUS

Thermostats

Part No. 775-107
133 degree, Stainless Steel
O.E. No. 437090

Part No. 775-110
143 degree Stainless Steel
O.E. No. 393659

Part No. 775-120
60-75 HP 3 Cyl (143 Degree)
O.E. No. 396987

Part No. 775-125
143 degree Brass
O.E. No. 393659

Part No. 775-130
Fits: OMC 60 degree, 143 degree
O.E. No. 435491

Part No. 775-205
Fits: 9.9-15 hp 4 Strokes
O.E. No. 5041185

Ignition Coils

Ignition Coil
Part No. 375-2508-09K
O.E. No. 582366, 583737, 584561

Ignition Coil
Part No. 375-2508
O.E. No. 582508

Ignition Coil Application Guide

H.P.	Years	Part No.	Qty.
4	1977-80	375-2508-09K	1
4 Deluxe	1985-99	375-2508	2
4.5, 6, 7.5, 8	1980-84	375-2508-09K	2
4.5	1986-87	375-2508	2
5	1985-91	375-2508	2
6	1977 -84	375-2508-09K	2
6,8	1985-90	375-2508	2
6.5 Comm.	1989-90	375-2508	2
9.9/15	1977-84	375-2508-09K	2
9.9/15	1985-92	375-2508	2
9.9/15 4-Stroke	1994-99	375-2508-09K	2
10,14 Comm.	1989-90	375-2508-09K	2
14	1988	375-2508-09K	2
20,25,30	1985-99	375-2508	2
25	1977-84	375-2508-09K	2
25 Comm.	1985-91	375-2508	2
28	1987-88	375-2508-09K	2
28 (7)	1989-90	375-2508	2
30	1977-84	375-2508-09K	2
35	1977-84	375-2508-09K	2
40	1977-84	375-2508-09K	2
40 Thru 50, 2 Cyl.	1985-88	375-2508	2
40 Comm.	1985-90	375-2508	2
45 Comm.	1985-92	375-2508	2
45SS	1987-90	375-2508	2
48 (7)	1987-88	375-2508	2
50	1978-84	375-2508-09K	2
50	1985-88	375-2508	2

H.P.	Years	Part No.	Qty.
55	1978-84	375-2508-09K	2
55 Comm.	1985-92	375-2508	2
60	1978-84	375-2508-09K	2
60	1985-01	375-2508	3
60 SST	1989-90	375-2508	3
3 Cyl. Thru V-8 percyl	1985-99	375-2508 (6)	
65	1979-84	375-2508-09K	3
65 Comm.	1985-01	375-2508	3
70	1979-84	375-2508-09K	3
70	1985-01	375-2508	3
75	1979-84	375-2508-09K	3
75	1985-99	375-2508	3
85	1978-84	375-2508-09K	4
85	1985-95	375-2508	4
88	1987-96	375-2508	4
90	1978-84	375-2508-09K	4
90	1985-94	375-2508	4
100	1978-84	375-2508-09K	4
100	1985-99	375-2508	4
110	1986-90	375-2508	4
115	1978-84	375-2508-09K	4
115	1985-99	375-2508	4
120	1985-99	375-2508	4
125	1991-99	375-2508	4
125 Comm.	1989-99	375-2508	4
140	1978-84	375-2508-09K	4
140	1985-99	375-2508	4
150	1979-84	375-2508-09K	

H.P.	Years	Part No.	Qty.
150	1985-99	375-2508(6)	6
155 Comm.	1984-99	375-2508(1)	6
175	1979-84	375-2508-09K	6
185	1984-99	375-2508	6
200	1979-84	375-2508-09K	6
200	1985-99	375-2508	6
225	1986-99	375-2508	6
235	1979-84	375-2508-09K	6
250	1991-99	375-2508	8
275	1985-99	375-2508	8
300,3.6	1985-99	375-2508	8
Sail Drive	1978-99	375-2508-09K	2
Sea Drive	1984-85	375-2508-09K	(5) 2

(1) Except loopers (5) Plug In Coil Only
(6) Except 150-175 Loop

VISA MasterCard AMERICAN EXPRESS DISCOVER NOVUS
New York • 1-800-222-3375
631-244-8060 • fax 631-244-0556
61 Floyd Run, Bohemia, NY 11716
Puerto Rico
787-832-2499 • fax 787-832-2939
234 Balboa St., Mayaquez, Puerto Rico 00681-2605
e-mail: info@wsmparts.com • www.wsmparts.com
WSM PERFORMANCE PARTS

Protorque Starters

10 Tooth Starter
O.E. No. 586276, 386430
Fits: 9.9-15hp 2Stroke 8-11hp 4 Stroke
Part No. PH130-0014

10 Tooth 1pc Starter Drive
Part No. PH175-0016

Brushed Com-End Plate
Part No. PH185-0007

10 Tooth Starter
O.E. No. 586274, 584613
Fits: 9.9-15hp 1993-Up
Part No. PH130-0036

10 Tooth 1pc Starter Drive
Part No. PH175-0016

Brushed Com-End Plate
Part No. PH185-0007

10 Tooth Starter
O.E. No. 586275, 584608
Fits: 9.9-15hp 1997-Up 4 Stroke
Part No. PH130-0013

10 Tooth 1pc Starter Drive
Part No. PH175-0004
Note: One pc. starter drive will not work on PH130-0013. Only to be used when replacing a drive on OE unit with 1 pc. design.

10 Tooth 2pc Starter Drive
Part No. PH175-0018

PRECISION
Arizona • 1-800-977-1414
480-966-1550 • fax 480-966-1565
16441 N. 91St. Suite 105 Scottsdale, AZ 85260
Florida • 1-866-417-4072
941-238-0960 • fax 941-238-0965
1899 60th Place East, Bradenton, FL 34203
e-mail: info@wsmparts.com • www.wsmparts.com
VISA MasterCard AMERICAN EXPRESS DISCOVER NOVUS

Protorque Starters

9 Tooth Starter
O.E. No. 583473, 585059
Fits: 20-35hp 2Cyl 1987-Up
Part No. PH130-0017

9 Tooth 1pc Starter Drive
Part No. PH175-0003

9 Tooth 2pc Starter Drive
Part No. PH175-0017

***Brushed Com End Plate**
Part No. PH185-0005

10 Tooth Starter
O.E. No. 584818, 586272
Fits: 25-35hp 1997-99
Part No. PH130-0026

10 Tooth 2pc Starter Drive
Part No. PH175-0018

***Brushed Com End Plate**
Part No. PH185-0006

11 Tooth Starter
O.E. No. 585061, 586278
Fits: 18-40hp 1957-88
Part No. PH130-0038

11 Tooth 1pc Starter Drive
Part No. PH175-0001

11 Tooth 2pc Starter Drive
Part No. PH175-0019

***Brushed Com End Plate**
Part No. PH185-0005

**For Brushes only, order #BR-36S*

New York • 1-800-222-3375
631-244-8060 • fax 631-244-0556
61 Floyd Run, Bohemia, NY 11716
Puerto Rico
787-832-2499 • fax 787-832-2939
234 Balboa St., Mayaquez, Puerto Rico 00681-2605
e-mail: info@wsmparts.com • www.wsmparts.com

Protorque Starters

9 Tooth Starter
O.E. No. 585056, 586279
Fits: 20, 40, 50hp 1989-Up 48-50hp 90-Up
Part No. PH130-0016

9 Tooth 1pc Starter Drive
Part No. PH175-0003

9 Tooth 2pc Starter Drive
Part No. PH175-0017

***Brushed Com End Plate**
Part No. PH185-0001

9 Tooth Starter
O.E. No. 585063, 586280
Fits: 40-60hp 35 Jet 1971-Up
Part No. PH130-0045

9 Tooth 1pc Starter Drive
Part No. PH175-0004

9 Tooth 2pc Starter Drive
Part No. PH175-0017

***Brushed Com End Plate**
Part No. PH185-0001

9 Tooth Starter
O.E. No. 586768
Fits: 40, 50, 75, & 90hp E-Tec
Part No. PH130-0035

9 Tooth 1pc Starter Drive
Part No. 341-159

***Brushed Com End Plate**
Part No. PH185-0001

PRECISION
Arizona • 1-800-977-1414
480-966-1550 • fax 480-966-1565
16441 N. 91St. Suite 105 Scottsdale, AZ 85260
Florida • 1-866-417-4072
941-238-0960 • fax 941-238-0965
1899 60th Place East, Bradenton, FL 34203
e-mail: info@wsmparts.com • www.wsmparts.com
VISA MasterCard AMERICAN EXPRESS DISCOVER NOVUS

Protorque Starters

9 Tooth Starter
O.E. No. 585058, 586281
Fits: 55-75hp 1968-Up
Part No. PH130-0043

9 Tooth 1pc Starter Drive
Part No. PH175-0003

9 Tooth 2pc Starter Drive
Part No. PH175-0017

***Brushed Com End Plate**
Part No. PH185-0001

10 Tooth Starter
O.E. No. 585057, 586283
Fits: 85-140hp 1973-85 85-115hp 1986-Up
Part No. PH130-0044

10 Tooth 1pc Starter Drive
Part No. PH175-0003

10 Tooth 2pc Starter Drive
Part No. PH175-0018

***Brushed Com End Plate**
Part No. PH185-0001

9 Tooth Starter
O.E. No. 5033799
Fits: 90-140Hp 4 Stroke
Part No. PH130-0071

10 Tooth Starter
O.E. No. 585060, 586285
Fits: 120-140hp 1986-Up
Part No. PH130-0012

10 Tooth 1pc Starter Drive
Part No. PH175-0004

10 Tooth 2pc Starter Drive
Part No. PH175-0018

***Brushed Com End Plate**
Part No. PH185-0001

New York • 1-800-222-3375
631-244-8060 • fax 631-244-0556
61 Floyd Run, Bohemia, NY 11716
Puerto Rico
787-832-2499 • fax 787-832-2939
234 Balboa St., Mayaquez, Puerto Rico 00681-2605
e-mail: info@wsmparts.com • www.wsmparts.com

Protorque Starters

8 Tooth Starter
O.E. No. 585062, 586288
Fits: 150-235hp Up to 1986 175hp 86-Up
Part No. PH130-0039

8 Tooth 1pc Starter Drive
Part No. PH175-0007

***Brushed Com End Plate**
Part No. PH185-0002

Motor Only
O.E. No. 438878, 586287
Fits: 150-175hp 1991-Up
Part No. PH130-0018

OMC V4 60 Deg.
O.E. No. 584980, 586284
80-115 HP 1997-Up
Part No. PH130-0027

***Brushed Com End Plate**
Part No. PH185-0006

10 Tooth Starter
O.E. No. 586731, 586890
Fits: V6 & V8 Looper
Part No. PH130-0008

***10 Tooth 1pc Starter Drive**
Part No. PH175-0015

PRECISION
Arizona • 1-800-977-1414
480-966-1550 • fax 480-966-1565
16441 N. 91St. Suite 105 Scottsdale, AZ 85260
Florida • 1-866-417-4072
941-238-0960 • fax 941-238-0965
1899 60th Place East, Bradenton, FL 34203
e-mail: info@wsmparts.com • www.wsmparts.com

Protorque Starter Solenoids

Starter/Trim Solenoid
O.E. No. 586180
Fits: 9.9 Thru 300hp
V4, V6, V8
Part No. PH375-0012

Starter Solenoid
O.E. No. 586842
Fits: 75-250hp FFI & DI
Part No. PH375-0027

Starter Solenoid
O.E. No. 584128
Fits: 9.9&15hp 1991-92
Part No. PH375-0029

Tilt/Trim Solenoid
O.E. No. 979774
Fits: 115-135hp 1974-75
Part No. PH375-0030

Starter Solenoid
O.E. No. 378444
Fits: 18-70hp 1957-66
Part No. PH375-0032

Starter/Trim Solenoid
O.E. No. 581528
Fits: 9.9&15hp 1978-86
70-235hp 1976-81
Part No. PH375-0033

Starter Solenoid
O.E No 5031483
Fits: 25-140 HP
Part No. PH375-0047

Starter Solenoid
O.E No 5030783
Fits: 9.9-70 HP
Part No. PH375-0048

Starter Solenoid
O.E No 587020
Fits: 10-300 Hp E-Tec
Part No. PH375-0049

Starter Solenoid
O.E. No. 586774
Fits: 40-300 Hp E-Tec
2004-09
Part No. PH375-0050

Tilt/Trim Relay 12V 30A
O.E. No. 586224
Fits: 60-300hp 1982-92
Part No. PH360-0001

Starter Brushes
Part No. PH185-BK01

Starter Solenoid
O.E. No. 584580
Fits: 9.9&15hp 1993-Up
Part No. 343-398

New York • 1-800-222-3375
631-244-8060 • fax 631-244-0556
61 Floyd Run, Bohemia, NY 11716
Puerto Rico
787-832-2499 • fax 787-832-2939
234 Balboa St., Mayaquez, Puerto Rico 00681-2605
e-mail: info@wsmparts.com • www.wsmparts.com

Protorque Trim Motors

2 Wire 4 Bolt Ffi Motors 1998 & Up
O.E. No.: 5005254
Part No. PH200-T004

2 Wire 4 Bolt Fast Track, 3 Cyl.
50 HP 1995-Up, 60-225 1991-02
O.E. No.: 438529
Part No. PH200-T006

1981-1992 2 Wire 3 Bolt
O.E. No.: 393988, 985237, 391264, 983019
Part No. PH200-T014

3 Wire V4/V6 1976-1980
O.E. No.: 387277, 584107
Part No. PH200-T020

2 Wire 4 Bolt 1989 & Up 40-50 hp
has female terminals
Part No. PH200-T021

2 Wire 4bolt 1989 & Up 40-50hp
this motor has male terminals
Part No. PH200-T022

2 Wire 3 Bolt O.E. No.: 435548
Part No. PH200-T042

3 Wire Fits Pump Assy #173946
O.E. No.: 172155, 173944
Part No. PH200-T049

3 Wire 4.25 Reservoir Base
O.E. No.: 173596
Part No. PH200-T052

Tilt / Trim Motor
O.E. No.: 984356
Part No. PH200-T056

OMC 4 Bolt 2 Wire, 2001-04 40-50 HP,
2005-Up 75-90 HP E-Tec,
2007-Up 115 E-Tec, 1009-Up 130 E-Tec
O.E. No.: 5005817, 5005838, 5006319
Part No. PH200-T061

40-50hp 2001 & up
O.E. No. 5031482,5036081
Part No. PH200-T062

PRECISION
Arizona • 1-800-977-1414
480-966-1550 • fax 480-966-1565
16441 N. 91St. Suite 105 Scottsdale, AZ 85260
Florida • 1-866-417-4072
941-238-0960 • fax 941-238-0965
1899 60th Place East, Bradenton, FL 34203
e-mail: info@wsmparts.com • www.wsmparts.com
VISA MasterCard AMERICAN EXPRESS DISCOVER NOVUS

Trim Harness

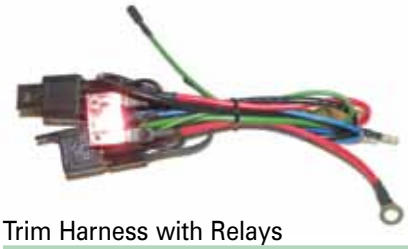

Trim Harness with Relays
Part No. PH200-WH01

Spark Plug Wires

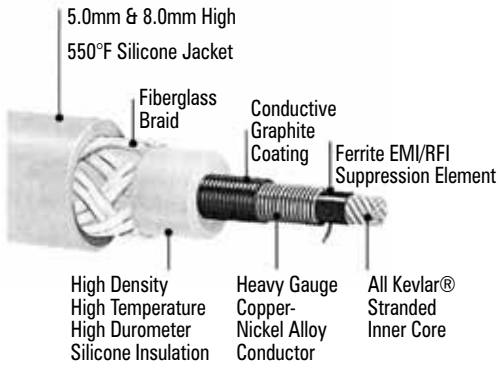

368-100-09

Part No.	
368-100-04	4" wire
368-100-06	6" wire
368-100-09	9" wire
368-100-12	12" wire
368-100-13	13" wire
368-100-14	14" wire
368-100-15	15" wire

25ft Plug Wire Kit
Part No. 368-400-25

Part No. 369-110
90° Spark Plug Boot, Black

Plug Wire Terminal, Brass (10 Pack)
Part No. 370-100

Plug Wire Terminal, Stainless (10 Pack))
Part No. 370-110

Part No. 369-110K
90° Spark Plug Boot and Terminal Kit

Rectifiers

Part No. PH350-0001
3 Wire Rectifier for Outboard Alternators
Reference No. 580841, 582307, 582399

Part No. PH350-0002
4 Wire Rectifier for Outboard Alternators
Reference No. 581778

New York • 1-800-222-3375
631-244-8060 • fax 631-244-0556
61 Floyd Run, Bohemia, NY 11716
Puerto Rico
787-832-2499 • fax 787-832-2939
234 Balboa St., Mayaquez, Puerto Rico 00681-2605
e-mail: info@wsmparts.com • www.wsmparts.com

WSM Power Packs

Part No. 360-2125
OMC CD4 (No Limit)
O.E. No. 582125
1980-84 85, 90, 100, 115, 120, and 140 HP 4Cyl

Part No. 360-2285
OMC CD2 (No Limit)
O.E. No. 582285
1985-88 2Cyl

Part No. 360-2556
OMC CD3/6 5800
O.E. No. 582556
1984 65HP 3Cyl, 155HP 6Cyl, 1985 150 & 235HP 6Cyl

Part No. 360-3110
OMC CD4 (No Limit)
O.E. No. 583110
1986-87 88, 90 & 110 HP 4 Cyl

Part No. 360-3748
OMC CD3 6700
O.E. No. 583748
1986-87 150, 155, & 175 HP 6Cyl

Part No. 360-4767
OMC CD2 6100
O.E. No. 584767
1992-2004 2Cyl

Part No. 360-4783
OMC CD2 (No Limit)
O.E. No. 584783
1993-2006 9.9, 10, & 15 HP 2Cyl

Part No. 360-5316
OMC CD2 6700
O.E. No. 175316
1992-2005 40 & 50 HP 2Cyl

WSM Stators

Part No. 367-4643
O.E No. 584643
Fits: Loopers 1993-Up

Part No. 367-4981
O.E No. 584981
Fits: 1993-2006 V6 60 degree

PRECISION
Arizona • 1-800-977-1414
480-966-1550 • fax 480-966-1565
16441 N. 91St. Suite 105 Scottsdale, AZ 85260
Florida • 1-866-417-4072
941-238-0960 • fax 941-238-0965
1899 60th Place East, Bradenton, FL 34203
e-mail: info@wsmparts.com • www.wsmparts.com

Re-Build Kits

One convenient part number gives you everything you need.

WSM rebuild kits come complete with all parts needed to rebuild your engine.

Kits include:

- WSM pistons complete with Japanese rings, pins, and clips
- Highest quality gaskets available
- Crank bearings, rod bearings, and rod bolts

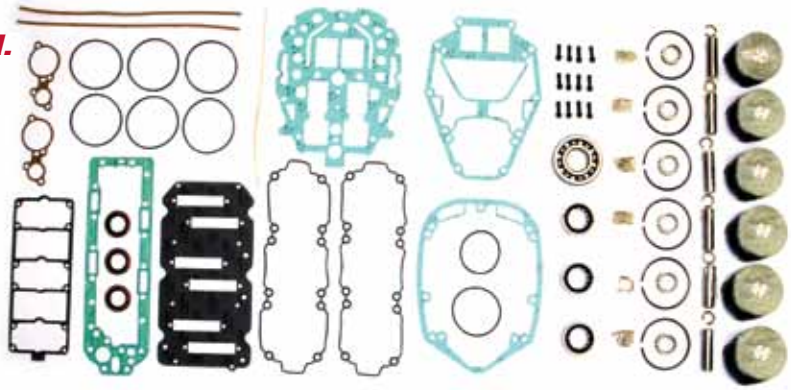

Horse Power	Year	Kit No.	Bore Size
15-25HP	1994-UP	**100-04-10**	STD.
Mercosil Block		**100-04-12**	.020
2 Cyl.		**100-04-13**	.030
2.562" Bore		**100-04-14**	.040

Kit Includes: Description	Part No.	Qty.
Piston Kit	**100-04k**Series	2
Gasket Kit	**500-198**	1
Upper Main Bearing	**010-147**	1
Center Main Bering	**010-266**	1
Lower Main Bearing	**010-146**	1
Upper Rod Bearing	**010-134-27**	2
Lower Rod Bearing	**010-152**	2
Rod Bolt	**805-200**	4

Horse Power	Year	Kit No.	Bore Size
40 HP	1990-97	**100-05-10**	STD.
45 HP	1986-89	**100-05-11**	.010
50 HP	1970-85	**100-05-115**	.015
4 Cyl.		**100-05-12**	.020
2.565″ Bore		**100-05-13**	.030
		100-05-14	.040

Kit Includes: Description	Part No.	Qty.
Piston Kit	**100-05** series	4
Gasket Kit	**500-200**	1
Upper Main Bearings	**010-221-01**	1
Center Main Bearings	**010-137-56**	1
Lower Main Bearings	**010-221-01**	1
Upper Rod Bearings	**010-126-27**	4
Lower Rod Bearings	**010-135-25**	4
Rod Bolts	**805-200**	8

Horse Power	Year	Kit No.	Bore Size
50-60 HP	1991-1997	**100-07-10**	Std.
3 Cyl.		**100-07-11**	.010
2.955″ Bore		**100-07-115**	.015
		100-07-12	.020
		100-07-13	.030
		100-07-14	.040

Kit Includes: Description	Part No.	Qty.
Piston Kit	**100-07** series	3
Gasket Kit	**500-204**	1
Upper Main Bearings	**010-255**	1
Center Main Bearings	**010-148**	2
Lower Main Bearings	**010-221-01**	1
Upper Rod Bearings	**010-136-29**	3
Lower Rod Bearings	**010-150-01**	3
Rod Bolts	**805-200**	6

Horse Power	Year	Kit No.	Bore Size
50-60 HP	1998-2005	**100-06-10**	Std.
3 Cyl.		**100-06-11**	.010
2.992″ Bore		**100-06-115**	.015
		100-06-12	.020
		100-06-13	.030
		100-06-14	.040

Kit Includes: Description	Part No.	Qty.
Piston Kit	**100-06** series	3
Gasket Kit	**500-204**	1
Upper Main Bearings	**010-255-01**	1
Center Main Bearings	**010-267**	2
Lower Main Bearings	**010-221-01**	1
Upper Rod Bearings	**010-136-29T**	3
Lower Rod Bearings	**010-150-01**	3
Rod Bolts	**805-200**	6

New York • 1-800-222-3375
631-244-8060 • fax 631-244-0556
61 Floyd Run, Bohemia, NY 11716

Puerto Rico
787-832-2499 • fax 787-832-2939
234 Balboa St., Mayaquez, Puerto Rico 00681-2605

e-mail: info@wsmparts.com • www.wsmparts.com

Re-Build Kits

One convenient part number gives you everything you need.

WSM rebuild kits come complete with all parts needed to rebuild your engine.

Kits include:

- WSM pistons complete with Japanese rings, pins, and clips
- Highest quality gaskets available
- Crank bearings, rod bearings, and rod bolts

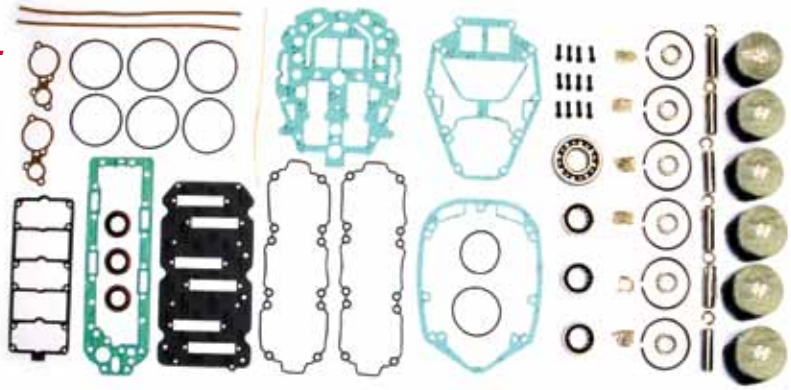

Horse Power	Year	Kit No.	Bore Size
50-60 HP	1984-90	**100-15-10**	STD.
70 HP	1977-83	**100-15-11**	.010
3 Cyl.		**100-15-115**	.015
		100-15-12	.020
2.875" Bore		**100-15-13**	.030
Lowdome cross flow		**100-15-14**	.040

Kit Includes:

Description	Part No.	Qty.
Piston Kit	**100-15** series	3
Gasket Kit	**500-202**	1
Upper/Lower Main Bearings	**010-206-01**	2
Center Main Bearings	**010-137-56**	2
Upper Rod Bearings	**010-136-29**	3
Lower Rod Bearings	**010-138**	3
Rod Bolts	**805-200**	6

Horse Power	Year	Kit No.	Bore Size
75 HP	1984-86	**100-15-20**	STD.
80 HP	1978-83	**100-15-21**	.010
85 HP	1973-1977	**100-15-215**	.015
4 Cyl.		**100-15-22**	.020
2.875" Bore		**100-15-23**	.030
Lowdome cross flow		**100-15-24**	.040

Kit Includes:

Description	Part No.	Qty.
Piston Kit	**100-15** series	4
Gasket Kit	**500-209**	1
Lower Main Bearings	**010-221-01**	1
Inline Upper Main Bearing	**010-256**	1
Center Main Bearings	**010-132-56**	2
Upper Rod Bearings	**010-136-29**	4
Lower Rod Bearings	**010-138**	4
Rod Bolts	**805-200**	8

Horse Power	Year	Kit No.	Bore Size
70-90 HP	1987-1991	**100-25-10**	STD.
L3 3 Cyl.		**100-25-11**	.010
3.375" Bore		**100-25-115**	.015
Bottom Guided		**100-25-12**	.020
		100-25-13	.030
		100-25-14	.040

Kit Includes:

Description	Part No.	Qty.
Piston Kit	**100-25** series	3
Gasket Kit	**500-206**	1
Upper Main Bearings	**010-257**	1
Center Main Bearings	**010-143**	2
Lower Main Bearings	**010-207-04**	1
Upper Rod Bearings	**010-120-29**	3
Lower Rod Bearings	**010-151**	3
Rod Bolts	**805-204**	6

Horse Power	Year	Kit No.	Bore Size
70-90 HP	1992-1993	**100-35-10**	STD.
3 Cyl.		**100-35-11**	.010
3.375" Bore		**100-35-115**	.015
Top Guided		**100-35-12**	.020
		100-35-13	.030
		100-35-14	.040

Kit Includes:

Description	Part No.	Qty.
Piston Kit	**100-35** series	3
Gasket Kit	**500-206**	1
Upper Main Bearings	**010-257**	1
Center Main Bearings	**010-143**	2
Lower Main Bearings	**010-207-04**	1
Upper Rod Bearings	**010-142-29**	3
Lower Rod Bearings	**010-151**	3
Rod Bolts	**805-204**	6

PRECISION
Arizona • 1-800-977-1414
480-966-1550 • fax 480-966-1565
16441 N. 91St. Suite 105 Scottsdale, AZ 85260
Florida • 1-866-417-4072
941-238-0960 • fax 941-238-0965
1899 60th Place East, Bradenton, FL 34203
e-mail: info@wsmparts.com • www.wsmparts.com
VISA MasterCard AMERICAN EXPRESS DISCOVER NOVUS

Re-Build Kits

One convenient part number gives you everything you need.

WSM rebuild kits come complete with all parts needed to rebuild your engine.

Kits include:

- WSM pistons complete with Japanese rings, pins, and clips
- Highest quality gaskets available
- Crank bearings, rod bearings, and rod bolts

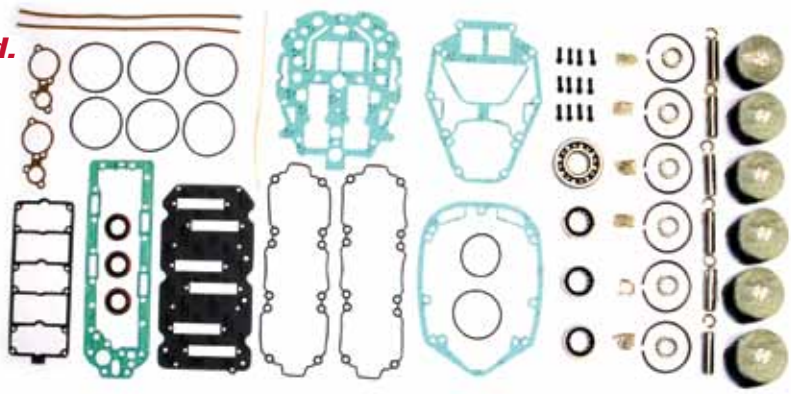

Horse Power	Year	Kit No.	Bore Size
75-90 HP	1994-Up	**100-40-10**	STD.
3 Cyl.		**100-40-11**	.010
3.5″ Bore		**100-40-115**	.015
		100-40-12	.020
		100-40-13	.030
		100-40-14	.040

Kit Includes:

Description	Part No.	Qty.
Piston Kit	**100-40** series	3
Gasket Kit	**500-206**	1
Upper Main Bearings	**010-257**	1
Center Main Bearings	**010-143**	2
Lower Main Bearings	**010-207-04**	1
Upper Rod Bearings	**010-142-29**	3
Lower Rod Bearings	**010-151**	3
Rod Bolts	**805-204**	6

Horse Power	Year	Kit No.	Bore Size
1.5 litre DFI/OptiMax	ALL	**100-27-10**	STD.
3 cyl		**100-27-115**	.015
3.6255 Bore		**100-27-20**	.020
75 90 115 HP		**100-27-13**	.030
		100-27-14	.040

Kit Includes:

Description	Part No.	Qty.
Pistons	**100-27** series	3
Gasket Set	**500-207**	1
Wrist Pin Needles	**010-120-34**	3
Center Main Bearings	**010-149**	2
Lower Rod Bearing	**010-151**	3
Lower Main Bearing	**010-207-04**	1
Upper Main Bearing	**010-254**	1
Rod Bolts	**805-204**	6

Horse Power	Year	Kit No.	Bore Size
100-125 HP	1989-1991	**100-25-20**	STD.
4 cyl 3.375 Bore		**100-25-21**	.010
		100-25-215	.015
Bottom Guided		**100-25-22**	.020
Rod		**100-25-23**	.030
		100-25-24	.040

Kit Includes:

Description	Part No.	Qty.
Pistons	**100-25K**	4
Gasket Set	**500-210**	1
Upper Main Bearings	**010-257**	1
Center Main Bearings	**010-143**	3
Lower Main Bearings	**010-207-04**	1
Upper Rod Bearings	**010-120-29**	4
Lower Rod Bearings	**010-151**	4
Rod Bolts	**805-204**	8

Horse Power	Year	Kit No.	Bore Size
100-115 HP	1992-1993	**100-35-20**	STD.
4 Cyl. L4		**100-35-21**	.010
		100-35-215	.015
3.375″ Bore		**100-35-22**	.020
Top Guided		**100-35-23**	.030
		100-35-24	.040

Kit Includes:

Description	Part No.	Qty.
Piston Kit	**100-35** series	4
Gasket Kit	**500-208**	1
Upper Main Bearings	**010-257**	1
Center Main Bearings	**010-143**	3
Lower Main Bearings	**010-207-04**	1
Upper Rod Bearings	**010-142-29**	4
Lower Rod Bearings	**010-151**	4
Rod Bolts	**805-204**	8

New York • 1-800-222-3375
631-244-8060 • fax 631-244-0556
61 Floyd Run, Bohemia, NY 11716

Puerto Rico
787-832-2499 • fax 787-832-2939
234 Balboa St., Mayaquez, Puerto Rico 00681-2605

e-mail: info@wsmparts.com • www.wsmparts.com

Re-Build Kits

One convenient part number gives you everything you need.

WSM rebuild kits come complete with all parts needed to rebuild your engine.

Kits include:

- WSM pistons complete with Japanese rings, pins, and clips
- Highest quality gaskets available
- Crank bearings, rod bearings, and rod bolts

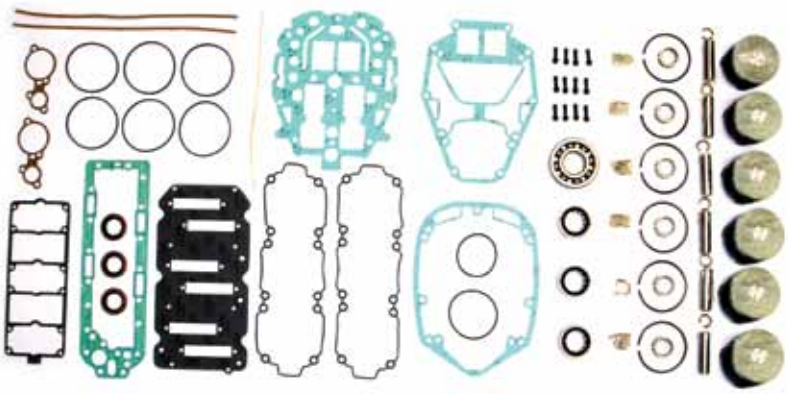

Horse Power	Year	Kit No.	Bore Size
100-125 HP	1994-Up	**100-40-20**	STD.
4 Cyl. L4		**100-40-21**	.010
3.5" Bore		**100-40-215**	.015
Top Guided		**100-40-22**	.020
		100-40-23	.030
		100-40-24	.040

Kit Includes:

Description	Part No.	Qty.
Piston Kit	**100-40** series	4
Gasket Kit	**500-208**	1
Upper Main Bearings	**010-257**	1
Center Main Bearings	**010-143**	3
Lower Main Bearings	**010-207-04**	1
Upper Rod Bearings	**010-142-29**	4
Lower Rod Bearings	**010-151**	4
Rod Bolts	**805-204**	8

Horse Power	Year	Kit No.	Bore Size
DFI 2.5 Liter		**100-49-10**	STD.
OptiMax		**100-49-115**	.015
135/150/175 HP		**100-49-13**	.030
Used with 600		**100-49-14**	.040
series connecting rod.			
O-Ringed Head			

Kit Includes:

Description	Part No.	Qty.
Piston Kit	**100-49** (PK/SK)	6
Gasket Kit	**500-222**	1
Upper Main Bearings	**010-263**	1
Center Main Bearings	**010-262**	2
Lower Main Bearings	**010-207-05**	1
Upper Rod Bearings	**010-137-34**	6
Lower Rod Bearings	**010-150-01**	6
Rod Bolts	**805-210**	12

Horse Power	Year	Kit No.	Bore Size
135-150 HP	1983-1991	**100-50-10**	STD.
6 Cyl.		**100-50-11**	.010
3.125" Bore		**100-50-115**	.015
Bottom Guided 2 Liter		**100-50-12**	.020
used with 636		**100-50-13**	.030
connecting rod		**100-50-14**	.040

Kit Includes:

Description	Part No.	Qty.
Piston Kit	**100-50** (PK/SK)	6
Gasket Kit	**500-212**	1
Upper Main Bearings	**010-265**	1
Center Main Bearings	**010-281**	2
Lower Main Bearings	**010-207-05**	1
Upper Rod Bearings	**010-125-29**	6
Lower Rod Bearings	**010-150-01**	6
Rod Bolts	**805-208**	12

Horse Power	Year	Kit No.	Bore Size
135-150 HP	1992-1999	**100-30-10**	STD.
6 Cyl.		**100-30-11**	.010
3.125" Bore		**100-30-115**	.015
Top Guided		**100-30-12**	.020
2 Liter with horizontal		**100-30-13**	.030
Reeds with dowl		**100-30-14**	.040
Pinned head			

Kit Includes:

Description	Part No.	Qty.
Piston Kit	**100-30** (PK/SK)	6
Gasket Kit	**500-216**	1
Upper Main Bearings	**010-263**	1
Center Main Bearings	**010-262**	2
Lower Main Bearings	**010-207-05**	1
Upper Rod Bearings	**010-137-29**	6
Lower Rod Bearings	**010-150-01**	6
Rod Bolts	**805-210**	12

PRECISION
Arizona • 1-800-977-1414
480-966-1550 • fax 480-966-1565
16441 N. 91St. Suite 105 Scottsdale, AZ 85260
Florida • 1-866-417-4072
941-238-0960 • fax 941-238-0965
1899 60th Place East, Bradenton, FL 34203
e-mail: info@wsmparts.com • www.wsmparts.com
VISA MasterCard AMERICAN EXPRESS DISCOVER NOVUS

Re-Build Kits

One convenient part number gives you everything you need.

WSM rebuild kits come complete with all parts needed to rebuild your engine.

Kits include:

- WSM pistons complete with Japanese rings, pins, and clips
- Highest quality gaskets available
- Crank bearings, rod bearings, and rod bolts

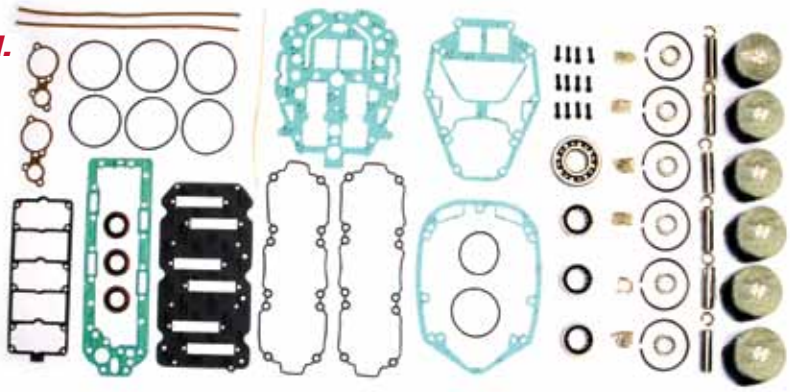

Horse Power Year	Kit No.	Bore Size
175 HP Sport Jet	**100-20-50**	STD
Carbureted with	**100-20-51**	.010
Cylinder Head	**100-20-515**	.015
O-Rings	**100-20-52**	.020
2.5 Liter	**100-20-53**	.030
	100-20-54	.040

Kit Includes: Description	Part No.	Qty.
Piston Kit	**100-20** (PK/SK)	6
Gasket Kit	**500-221-01**	1
Upper Main Bearing	**010-263**	1
Center Main Bearing	**010-262**	2
Lower Main Bearing	**010-207-05**	1
Upper Rod Bearing	**010-150-01**	6
Lower Rod Bearing	**010-137-29**	6
Rod Bolts	**805-210**	12

Horse Power Year	Kit No.	Bore Size
2.5 Liter With Head	**100-20-30**	STD
Gaskets And Carburetor	**100-20-31**	.010
3.5" Bore	**100-20-315**	.015
Top Guided 6 Cyl.	**100-20-32**	.020
	100-20-33	.030
	100-20-34	.040

Kit Includes: Description	Part No.	Qty.
Piston Kit	**100-20** (PK/SK)	6
Gasket Kit	**500-219**	1
Upper Main Bearing	**010-263**	1
Center Main Bearing	**010-262**	2
Lower Main Bearing	**010-207-05**	1
Upper Rod Bearing	**010-137-29**	6
Lower Rod Bearing	**010-150-01**	6
Rod Bolts	**805-210**	12

Horse Power Year	Kit No.	Bore Size
2.5 Liter with	**100-20-10**	STD
Head Gaskets &	**100-20-11**	.010
EFI, 3.5" Bore Top	**100-20-115**	.015
Guided 6 Cyl.	**100-20-12**	.020
	100-20-13	.030
	100-20-14	.040

Kit Includes: Description	Part No.	Qty.
Piston Kit	**100-20** (PK/SK)	6
Gasket Kit	**500-228**	1
Upper Main Bearing	**010-263**	1
Center Main Bearing	**010-262**	2
Lower Main Bearing	**010-207-05**	1
Upper Rod Bearing	**010-137-29**	6
Lower Rod Bearing	**010-150-01**	6
Rod Bolts	**805-210**	12

Horse Power Year	Kit No.	Bore Size
2.5 Liter with	**100-20-40**	STD
Cylinder Head	**100-20-41**	.010
O-Rings &	**100-20-415**	.015
Carburated 3.5"	**100-20-42**	.020
Bore Top Guided V6	**100-20-43**	.030
	100-20-44	.040

Kit Includes: Description	Part No.	Qty.
Piston Kit	**100-20** (PK/SK)	6
Gasket Kit	**500-220**	1
Upper Main Bearing	**010-263**	1
Center Main Bearing	**010-262**	2
Lower Main Bearing	**010-207-05**	1
Upper Rod Bearing	**010-137-29**	6
Lower Rod Bearing	**010-150-01**	6
Rod Bolts	**805-210**	12

New York • 1-800-222-3375
631-244-8060 • fax 631-244-0556
61 Floyd Run, Bohemia, NY 11716

Puerto Rico
787-832-2499 • fax 787-832-2939
234 Balboa St., Mayaquez, Puerto Rico 00681-2605

e-mail: info@wsmparts.com • www.wsmparts.com

Re-Build Kits

One convenient part number gives you everything you need.

WSM rebuild kits come complete with all parts needed to rebuild your engine.

Kits include:
- WSM pistons complete with Japanese rings, pins, and clips
- Highest quality gaskets available
- Crank bearings, rod bearings, and rod bolts

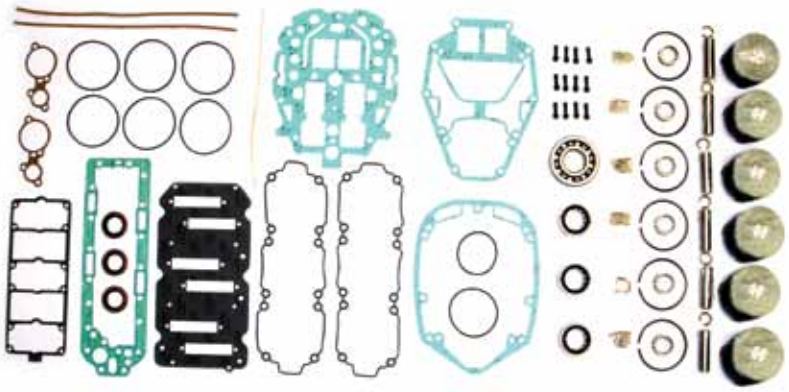

Horse Power	Year	Kit No.	Bore Size
2.5 Liter with		**100-20-20**	STD
Cylinder Head		**100-20-21**	.010
O-Rings & EFI		**100-20-215**	.015
3.5: bore Top		**100-20-22**	.020
Guided 6 Cyl.		**100-20-23**	.030
		100-20-24	.040

Kit Includes:

Description	Part No.	Qty.
Piston Kit	**100-20** (PK/SK)	6
Gasket Kit	**500-230**	1
Upper Main Bearing	**010-263**	1
Center Main Bearing	**010-262**	2
Lower Main Bearing	**010-207-05**	1
Upper Rod Bearing	**010-137-29**	6
Lower Rod Bearing	**010-150-01**	6
Rod Bolts	**805-210**	12

Horse Power	Year	Kit No.	Bore Size
2.4 Liter Chrome		**100-10-10**	STD.
Bore		**100-10-11**	.010
		100-10-12	.020
		100-10-13	.030
		100-10-14	.040

Kit Includes:

Description	Part No.	Qty.
Piston Kit	**100-10** (PK/SK)	6
Gasket Kit	**500-238**	1
Upper Main Bearings	**010-261**	1
Center Main Bearings	**010-260**	2
Lower Main Bearings	**010-207-05**	1
Upper Rod Bearings	**010-125-29**	6
Lower Rod Bearings	**010-150-01**	6
Rod Bolts	**805-208**	12

Horse Power	Year	Kit No.	Bore Size
DFI 2.5 Liter		**100-49-20**	STD.
Sport Jet 200 HP		**100-49-215**	.015
Used with 600		**100-49-23**	.030
series connecting		**100-49-24**	.040
rod &			
O-Ringed Head			

Kit Includes:

Description	Part No.	Qty.
Piston Kit	**100-49** (PK/SK)	6
Gasket Kit	**500-221-02**	1
Upper Main Bearings	**010-263**	1
Center Main Bearings	**010-262**	2
Lower Main Bearings	**010-207-05**	1
Upper Rod Bearings	**010-137-34**	6
Lower Rod Bearings	**010-150-01**	6
Rod Bolts	**805-210**	12

Horse Power	Year	Kit No.	Bore Size
210 HP Sport Jet		**100-20-70**	STD
Carbureted		**100-20-71**	.010
2.5 Liter		**100-20-715**	.015
		100-20-72	.020
		100-20-73	.030
		100-20-74	.040

Kit Includes:

Description	Part No.	Qty.
Piston Kit	**100-20** (PK/SK)	6
Gasket Kit	**500-221-03**	1
Upper Main Bearing	**010-263**	1
Center Main Bearing	**010-262**	2
Lower Main Bearing	**010-207-05**	1
Upper Rod Bearing	**010-137-29**	6
Lower Rod Bearing	**010-150-01**	6
Rod Bolts	**805-210**	12

PRECISION
Arizona • 1-800-977-1414
480-966-1550 • fax 480-966-1565
16441 N. 91St. Suite 105 Scottsdale, AZ 85260
Florida • 1-866-417-4072
941-238-0960 • fax 941-238-0965
1899 60th Place East, Bradenton, FL 34203
e-mail: info@wsmparts.com • www.wsmparts.com

Re-Build Kits

One convenient part number gives you everything you need.

WSM rebuild kits come complete with all parts needed to rebuild your engine.

Kits include:

- WSM pistons complete with Japanese rings, pins, and clips
- Highest quality gaskets available
- Crank bearings, rod bearings, and rod bolts

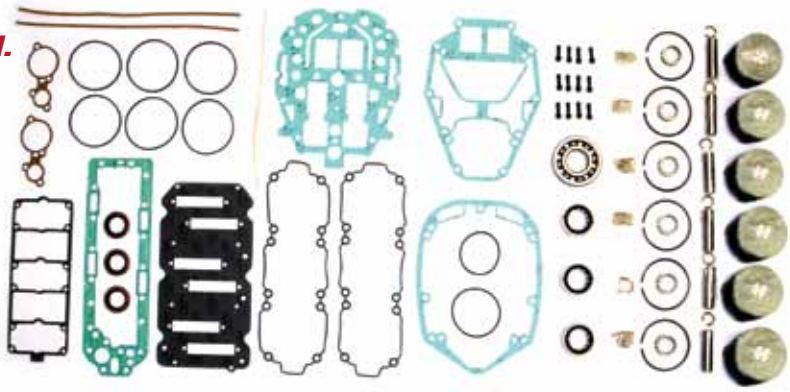

Horse Power	Year	Kit No.	Bore Size
240 HP Sport		**100-21-80**	STD
Jet EFI		**100-21-81**	.010
2.5 Liter		**100-21-815**	.015
		100-21-82	.020
		100-21-83	.030
		100-21-84	.040

Kit Includes:

Description	Part No.	Qty.
Piston Kit	**100-21** (PK/SK)	6
Gasket Kit	**500-221-04**	1
Upper Main Bearing	**010-263**	1
Center Main Bearing	**010-262**	2
Lower Main Bearing	**010-207-05**	1
Upper Rod Bearing	**010-137-29**	6
Lower Rod Bearing	**010-150-01**	6
Rod Bolts	**805-210**	12

Horse Power	Year	Kit No.	Bore Size
250 HP Sport		**100-47-20**	STD
Jet DFI		**100-47-215**	.015
3 Liter		**100-47-23**	.030
		100-47-24	.040

Kit Includes:

Description	Part No.	Qty.
Piston Kit	**100-47** (PK/SK)	6
Gasket Kit	**500-221-05**	1
Upper Main Bearing	**010-259**	1
Center Main Bearing	**010-282**	2
Lower Main Bearing	**010-207-05**	1
Upper Rod Bearing	**010-120-34**	6
Lower Rod Bearing	**010-151**	6
Rod Bolts	**805-204**	12

Horse Power	Year	Kit No.	Bore Size
2.5 Litre OptiMax		**100-28-10**	STD.
0G 960500 thru		**100-28-115**	.015
0T 178499		**100-28-13**	.030
O-Ringed Head		**100-28-14**	.040
Use with 644 Rod			

Kit Includes:

Description	Part No.	Qty.
Piston Kit	**100-28** (PK/SK)	6
Gasket Kit	**500-222**	1
Upper Main Bearings	**010-263**	1
Center Main Bearings	**010-262**	2
Lower Main Bearings	**010-207-05**	1
Upper Rod Bearings	**010-137-29**	6
Lower Rod Bearings	**010-150-01**	6
Rod Bolts	**805-210**	12

Horse Power	Year	Kit No.	Bore Size
3.0 Liter Carbureted		**100-45-10**	STD.
and EFI with Double		**100-45-11**	.010
Roller Center Mains		**100-45-115**	.015
		100-45-12	.020
		100-45-13	.030
		100-45-14	.040

Kit Includes:

Description	Part No.	Qty.
Piston Kit	**100-45** (PK/SK)	6
Gasket Kit	**500-242**	1
Upper Main Bearings	**010-259**	1
Center Main Bearings	**010-144**	2
Lower Main Bearings	**010-207-05**	1
Upper Rod Bearings	**010-120-34**	6
Lower Rod Bearings	**010-151**	6
Rod Bolts	**805-204**	12

New York • 1-800-222-3375
631-244-8060 • fax 631-244-0556
61 Floyd Run, Bohemia, NY 11716

Puerto Rico
787-832-2499 • fax 787-832-2939
234 Balboa St., Mayaquez, Puerto Rico 00681-2605

e-mail: info@wsmparts.com • www.wsmparts.com

Re-Build Kits

One convenient part number gives you everything you need.

WSM rebuild kits come complete with all parts needed to rebuild your engine.

Kits include:

- WSM pistons complete with Japanese rings, pins, and clips
- Highest quality gaskets available
- Crank bearings, rod bearings, and rod bolts

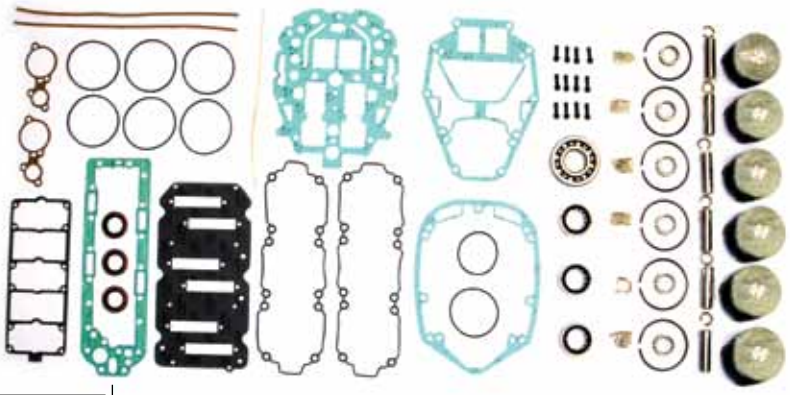

Horse Power Year	Kit No.	Bore Size
3.0 Liter Carbureted and EFI with Single Roller Center Mains	100-45-20	STD.
	100-45-21	.010
	100-45-215	.015
	100-45-22	.020
	100-45-23	.030
	100-45-24	.040

Kit Includes: Description	Part No.	Qty.
Piston Kit	100-45 (PK/SK)	6
Gasket Kit	500-242	1
Upper Main Bearings	010-259	1
Center Main Bearings	010-282	2
Lower Main Bearings	010-207-05	1
Upper Rod Bearings	010-120-34	6
Lower Rod Bearings	010-151	6
Rod Bolts	805-204	12

Horse Power Year	Kit No.	Bore Size
3.0 Litre OptiMax with Oval Pocket Piston & Single Roller Center Mains	100-47-10	STD.
	100-47-115	.015
	100-47-13	.030
	100-47-14	.040

Kit Includes: Description	Part No.	Qty.
Piston Kit	100-47 (PK/SK)	6
Gasket Kit	500-244	1
Upper Main Bearings	010-259	1
Center Main Bearings	010-282	2
Lower Main Bearings	010-207-05	1
Upper Rod Bearings	010-120-34	6
Lower Rod Bearings	010-151	6
Rod Bolts	805-204	12

Horse Power Year	Kit No.	Bore Size
3.0 Litre V-6 OptiMax with Round Pocket Piston & Single Roller Center Mains	100-48-10	STD.
	100-48-115	.015
	100-48-13	.030
	100-48-14	.040

Kit Includes: Description	Part No.	Qty.
Piston Kit	100-48 (PS)	6
Gasket Kit	500-243	1
Upper Main Bearings	010-259	1
Center Main Bearings	010-282	2
Lower Main Bearings	010-207-05	1
Upper Rod Bearings	010-120-34	6
Lower Rod Bearings	010-151	6
Rod Bolts	805-204	12

Horse Power Year	Kit No.	Bore Size
3.0 Liter OptiMax with Round Pocket Pistons & Double Roller Center Mains	100-48-20	STD.
	100-48-215	.015
	100-48-23	.030
	100-48-24	.040

Kit Includes: Description	Part No.	Qty.
Piston Kit	100-48 (PS)	6
Gasket Kit	500-244	1
Upper Main Bearings	010-259	1
Center Main Bearings	010-144	2
Lower Main Bearings	010-207-05	1
Upper Rod Bearings	010-120-34	6
Lower Rod Bearings	010-151	6
Rod Bolts	805-204	12

Horse Power Year	Kit No.	Bore Size
225-300 Hp XS DFI 3.0L 3.2L Stroker	100-51-10	STD
	100-51-11	.010
	100-51-115	.015
	100-51-12	.020
	100-51-13	.030
	100-51-14	.040

Kit Includes: Description	Part No.	Qty.
Piston Kit	100-51 (PK/SK)	6
Gasket Kit	500-245-01	1
Upper Main Bearings	010-259	1
Center Main Bearings	010-282	2
Lower Main Bearings	010-207-05	1
Upper Rod Bearings	010-120-34	6
Lower Rod Bearings	010-151	6
Rod Bolts	805-204	12

PRECISION
Arizona • 1-800-977-1414
480-966-1550 • fax 480-966-1565
16441 N. 91St. Suite 105 Scottsdale, AZ 85260
Florida • 1-866-417-4072
941-238-0960 • fax 941-238-0965
1899 60th Place East, Bradenton, FL 34203
e-mail: info@wsmparts.com • www.wsmparts.com

WSM Pistons

Picture Gallery

MERCURY 2.562" MERCOSIL BLOCK

Piston: 100-04K
O.E. No.: 767812968A 3
Ring Set: 200-04
O.E. No.:
Wrist Pin: 300-04
Clips: 400-04
O.E. No.: 40-828119

MERCURY 2.875" CROSS FLOW LOW DOME

Piston: 100-15K
O.E. No.: 774-8600A 3
Ring Set: 200-15*
O.E. No.: 39-817096A 6
Wrist Pin: 300-15
Clips: 400-19
O.E. No.: 53-857196

MERCURY 2.565"

Piston: 100-05K
O.E. No.: 743-5172A
Ring Set: 200-05
O.E. No.: 39-18653A 12
Wrist Pin: 300-05
Clips: 400-04
O.E. No.: 40-828119

MERCURY 2.992"

Piston: 100-06K
O.E. No.: 705-850026A 1
Ring Set: 200-06
O.E. No.: 39-831255A 6
Wrist Pin: 300-06
Clips: 400-19
O.E. No.: 53-857196

MARINER 2.835"

Piston: 010-801K
O.E. No.:
Ring Set: 010-901
O.E. No.: 39827491A12
Wrist Pin: 010-701
Clips 010-620SR
O.E. No.: 40-828119

MERCURY 2.955"

Piston: 100-07K
O.E. No.: 783-9613A 1
Ring Set: 200-07
O.E. No.: 783-19721A 6
Wrist Pin: 300-07
Clips: 400-19
O.E. No.: 53-857196

For Three Ring Piston Use Part No.18-3902 For Std Use Part No. 18-3916 For 0.15 And Use Part No. 18-3917 For 0.30

Available in over sizes: .010, .015, .020, .030,. 040. See charts for part numbers.

New York • 1-800-222-3375
631-244-8060 • fax 631-244-0556
61 Floyd Run, Bohemia, NY 11716
Puerto Rico
787-832-2499 • fax 787-832-2939
234 Balboa St., Mayaquez, Puerto Rico 00681-2605
e-mail: info@wsmparts.com • www.wsmparts.com

WSM Pistons

Picture Gallery

MERCURY 3.125" TOP GUIDED 2.0 LITRE

Piston: 100-30PK (Port)
O.E. No.: 765-7442T 32
Piston: 100-30SK (Starboard)
O.E. No.: 765-7441T 32
Ring Set: 200-30
O.E. No.: 93481A 12
Wrist Pin: 300-30
Clips: 400-19
O.E. No.: 53-857196

MERCURY 3.375" L3-L4 TOP GUIDED

Piston: 100-35K
O.E. No.: 777-815965T 4
Ring Set: 200-25
O.E. No.: 96170A 12
Wrist Pin: 300-20
Clips: 400-19
O.E. No.: 53-857196

MERCURY 3.125" 2.0 LITRE V-6 BOTTOM GUIDED

Piston: 100-50PK (Port)
O.E. No.: 765-7442T 36
Piston: 100-50SK (Starboard)
O.E. No.: 765-7441T 36
Ring Set: 200-30
O.E. No.: 93481A 12
Wrist Pin: 300-30
Clips: 400-19
O.E. No.: 53-857196

MERCURY 3.375" 2.4 LITER CHROME BLOCK & RESLEEVE

Piston: 14315G (Port)
O.E. No.: 766-8667T41
Piston: 14325G(Starboard)
O.E. No.: 766-8666T41
Ring Set: 200-10CH
O.E. No.: 39-813011A 12
Wrist Pin: 300-10
Clips: 400-19
O.E. No.: 53-857196

MERCURY 3.375" BOTTOM GUIDED L3-L4

Piston: 100-25K
O.E. No.: 777-9009T 13
Ring Set: 200-25
O.E. No.: 96170A 12
Wrist Pin: 300-20
Clips: 400-19
O.E. No.: 53-857196

MERCURY 3.501" BOTTOM GUIDED 2.5 Liter

Piston: 100-19PK (Port)
O.E. No.: 785-9737T 4
Piston: 100-19SK (Starboard)
O.E. No.: 785-9738T 4
Ring Set: 200-19
O.E. No.: 39-815515 A12
Wrist Pin: 300-20
Clips: 400-19
O.E. No.: 53-857196

Available in over sizes: .010, .0150, .020, .030,. 040. See charts for part numbers.

Arizona • 1-800-977-1414
480-966-1550 • fax 480-966-1565
16441 N. 91St. Suite 105 Scottsdale, AZ 85260
Florida • 1-866-417-4072
941-238-0960 • fax 941-238-0965
1899 60th Place East, Bradenton, FL 34203
e-mail: info@wsmparts.com • www.wsmparts.com

WSM Pistons

Picture Gallery

MERCURY 3.5" TOP GUIDED 2.5 LITRE

Piston: 100-20PK (Port)
O.E. No.: 785-9737T 9
Piston: 100-20SK (Starboard)
O.E. No.: 785-9738T 9
Ring Set: 200-20
O.E. No.: 39-815515A 12
Wrist Pin: 300-20
Clips: 400-19
O.E. No.: 53-857196

MERCURY 3.5" LOOP CHARGE L3-L4

Piston: 100-40K
O.E. No.: 2704-826191T 4
Ring Set: 200-20
O.E. No.: 39-822321A 12
Wrist Pin: 300-20
Clips: 400-19
O.E. No.: 53-857196

WSM HIGH PERFORMANCE PISTON MERCURY 3.5" TOP GUIDED 2.5 LITER WITH 1.5MM RINGS

Piston: 100-21PK (Port)
O.E. No. N/A
Piston: 100-21SK (Starboard)
O.E. No. N/A
Ring Set: 200-19
O.E. No. 39-815515 A12
Wrist Pin: 300-20
Clips: 400-19
O.E. No.: 53-857196

MERCURY 3.501" 23.31mm Pin 2.5 Liter

Piston: 100-49PK (Port)
O.E. No.: 859562T 4
Piston: 100-49SK (Starboard)
O.E. No.: 859563T 4
Ring Set: 200-49
O.E. No.: 877544A12
Wrist Pin: 300-49
Clips: 400-49
O.E. No.: 8320811

MERCURY 3.501" 2.5 Liter Optimax 19.57mm Pin

Piston: 100-28PK (Port)
O.E. No.: 858790T 2
Piston: 100-28SK (Starboard)
O.E. No.: 858789T 2
Ring Set: 200-28
O.E. No.: 853306A12
Wrist Pin: 300-28
Clips: 400-28
O.E. No.: 857196

New York • 1-800-222-3375
631-244-8060 • fax 631-244-0556
61 Floyd Run, Bohemia, NY 11716
Puerto Rico
787-832-2499 • fax 787-832-2939
234 Balboa St., Mayaquez, Puerto Rico 00681-2605
e-mail: info@wsmparts.com • www.wsmparts.com

WSM Pistons

Picture Gallery

MERCURY 3.625" 3.0 LITER

Piston: 100-45PK (Port)
O.E. No.: 700-858294-T1
Piston: 100-45SK (Starboard)
O.E. No.: 700-858295-T1
Ring Set: 200-45
O.E. No.: 39-858772A 12
Wrist Pin: 300-45
Clips: 400-23

MERCURY 3.6265"

Piston: 100-47PK (Port)
O.E. No.: 881054T 3
Piston: 100-47SK (Starboard)
O.E. No.: 881055T 3
Ring Set: 200-27
O.E. No.: 827179A12
Wrist Pin: 300-47
Clips: 400-47
O.E. No.:841202

MERCURY 3.6255" 1.5 Liter

Piston: 100-27K
O.E. No.: 879858T03
Ring Set: 200-27
O.E. No.: 827179A12
Wrist Pin: 300-27
Clips: 400-27
O.E. No.: 841202

MERCURY 3.6265"

Piston: 100-48PK (Port)
O.E. No.: 859296T 2
Piston: 100-48SK (Starboard)
O.E. No.: 859297T 2
Ring Set: 200-48
O.E. No.: 858772A12
Wrist Pin: 300-48
Clips: 400-48
O.E. No.: 8320811

MERCURY PRO XS 3.6265"

Piston: 100-51PK (Port)
O.E. No.: 842986 T03
Piston: 100-51SK (Starboard)
O.E. No.: 843199 T13
Ring Set: 200-27
O.E. No.: 827179A12
Wrist Pin: 300-27
Clips: 400-27
O.E. No.: 841202

Available in over sizes: .010, .0150, .020, .030,. 040. See charts for part numbers.

PRECISION
Arizona • 1-800-977-1414
480-966-1550 • fax 480-966-1565
16441 N. 91St. Suite 105 Scottsdale, AZ 85260
Florida • 1-866-417-4072
941-238-0960 • fax 941-238-0965
1899 60th Place East, Bradenton, FL 34203
e-mail: info@wsmparts.com • www.wsmparts.com

WSM Pistons

PISTON KIT APPLICATION CHART / RING SETS

Model	Cyl.	Bore	Part No.	Pos. Size	Ring No.	Size
15 hp	2	2.562	**100-04K**	Std.	**200-04**	Std.
1994-04			**100-04-05K**	.020	**200-04-05**	.020
Mercosil Block			**100-04-06K**	.030	**200-04-06**	.030
			100-04-07K	.040	**200-04-07**	.040
20 hp 72-79	2	2.565	**100-05K**	Std.	**200-05**	Std.
			100-05-04K	.010	**200-05-04**	.010
			100-05-045K	.015	**200-05-045**	.015
			100-05-05K	.020	**200-05-05**	.020
			100-05-06K	.030	**200-05-06**	.030
			100-05-07K	.040	**200-05-07**	.040
20 hp 1994-04	2	2.562	**100-04K**	Std.	**200-04**	Std.
			100-04-05K	.020	**200-04-05**	.020
			100-04-06K	.030	**200-04-06**	.030
			100-04-07K	.040	**200-04-07**	.040
25 hp 1994-04	2	2.562	**100-04K**	Std.	**200-04**	Std.
			100-04-05K	.020	**200-04-05**	.020
			100-04-06K	.030	**200-04-06**	.030
			100-04-07K	.040	**200-04-07**	.040
25 hp 84-86	2	2.835	**010-801K**	Std.	**010-901**	Std.
30 hp 84-86			**010-801-04K**	.010	**010-901-04**	.010
Mariner only			**010-801-05K**	.020	**010-901-05**	.020
			010-801-06K	.030	**010-901-06**	.030
			010-801-07K	.040	**010-901-07**	.040
30 hp 94-07	2	2.992	**100-06K**	Std.	**200-06**	Std.
30 hp Jet 98-07			**100-06-04K**	.010	**200-06-04**	.010
			100-06-045K	.015	**200-06-045**	.015
			100-06-05K	.020	**200-06-05**	.020
			100-06-06K	.030	**200-06-06**	.030
			100-06-07K	.040	**200-06-07**	.040
35 hp 84-89	2	2.875	N/A	- -	***200-15**	Std.
Cross Flow					***200-15-04**	.010
W/ Boost Port					***200-15-05**	.020
High Dome piston not available,					***200-15-06**	.030
Can use Low Dome Piston 100-15					***200-15-07**	.040
40 hp 72-83	2	2.875	N/A	- -	***200-15**	Std.
Cross Flow					***200-15-04**	.010
W/ Boost Port					***200-15-05**	.020
High Dome piston not available,					***200-15-06**	.030
Can use Low Dome Piston 100-15					***200-15-07**	.040

For three ring piston use part no.18-3902 for STD, use part no. 18-3916 for 0.015, and use part no. 18-3917 for 0.030

New York • 1-800-222-3375
631-244-8060 • fax 631-244-0556
61 Floyd Run, Bohemia, NY 11716
Puerto Rico
787-832-2499 • fax 787-832-2939
234 Balboa St., Mayaquez, Puerto Rico 00681-2605
e-mail: info@wsmparts.com • www.wsmparts.com

WSM Pistons

PISTON KIT APPLICATION CHART / RING SETS

Model	Cyl.	Bore	Part No.	Pos. Size	Ring No.	Size
40 hp 94-07	2	2.992	100-06K	Std.	200-06	Std.
			100-06-04K	.010	200-06-04	.010
			100-06-05K	.020	200-06-05	.020
			100-06-06K	.030	200-06-06	.030
			100-06-07K	.040	200-06-07	.040
40 hp 97-07	3	2.992	100-06K	Std.	200-06	Std.
			100-06-04K	.010	200-06-04	.010
			100-06-045K	.015	200-06-045	.015
			100-06-05K	.020	200-06-05	.020
			100-06-06K	.030	200-06-06	.030
			100-06-07K	.040	200-06-07	.040
40 hp 90-97	4	2.565	100-05K	Std.	200-05	Std.
			100-05-04K	.010	200-05-04	.010
			100-05-045K	.015	200-05-045	.015
			100-05-05K	.020	200-05-05	.020
			100-05-06K	.030	200-05-06	.030
			100-05-07K	.040	200-05-07	.040
50 hp 84-90	3	2.875	100-15K	Std.	*200-15	Std.
Cross Flow			100-15-04K	.010	*200-15-04	.010
			100-15-045K	.015		
W/ Boost Port			100-15-05K	.020	*200-15-05	.020
Low dome			100-15-06K	.030	*200-15-06	.030
			100-15-07K	.040	*200-15-07	.040
50 hp 70-85	4	2.565	100-05K	Std.	200-05	Std.
			100-05-04K	.010	200-05-04	.010
			100-05-045K	.015	200-05-045	.015
			100-05-05K	.020	200-05-05	.020
			100-05-06K	.030	200-05-06	.030
			100-05-07K	.040	200-05-07	.040
50 hp 91-97	3	2.955	100-07K	Std.	200-07	Std.
			100-07-04K	.010	200-07-04	.010
			100-07-045K	.015	200-07-045	.015
			100-07-05K	.020	200-07-05	.020
			100-07-06K	.030	200-07-06	.030
			100-07-07K	.040	200-07-07	.040
50 hp 98-Up	3	2.992	100-06K	Std.	200-06	Std.
60 hp 98-Up			100-06-04K	.010	200-06-04	.010
			100-06-045K	.015	200-06-045	.015
			100-06-05K	.020	200-06-05	.020
			100-06-06K	.030	200-06-06	.030
			100-06-07K	.040	200-06-07	.040

***For three ring piston use part no.18-3902 for STD, use part no. 18-3916 for 0.015, and use part no. 18-3917 for 0.030**

PRECISION
Arizona • 1-800-977-1414
480-966-1550 • fax 480-966-1565
16441 N. 91St. Suite 105 Scottsdale, AZ 85260
Florida • 1-866-417-4072
941-238-0960 • fax 941-238-0965
1899 60th Place East, Bradenton, FL 34203
e-mail: info@wsmparts.com • www.wsmparts.com

WSM Pistons

PISTON KIT APPLICATION CHART / RING SETS

Model	Cyl.	Bore	Part No.	Pos. Size	Ring No.	Size
60 hp 84-90	3	2.875	**100-15K**	Std.	***200-15**	Std.
Cross Flow			**100-15-04K**	.010	***200-15-04**	.010
W/ Boost Port			**100-15-045K**	.015		
			100-15-05K	.020	***200-15-05**	.020
Low Dome			**100-15-06K**	.030	***200-15-06**	.030
			100-15-07K	.040	***200-15-07**	.040
60 hp 84-90		2.875	N/A	-	**200-15**	Std.
65 hp 1973-76					***200-15-04**	.010
Cross Flow					***200-15-05**	.020
W/ Boost Port					***200-15-06**	.030
High Dome Not Available					***200-15-07**	.040
Can Use Part No. 100-15 Low Dome						
60 hp 98 & Up	3	2.992	**100-06K**	Std.	**200-06**	Std.
			100-06-04K	.010	**200-06-04**	.010
			100-06-045K	.015	**200-06-045**	.015
			100-06-05K	.020	**200-06-05**	.020
			100-06-06K	.030	**200-06-06**	.030
			100-06-07K	.040	**200-06-07**	.040
60 hp 91-97	3	2.955	**100-07K**	Std.	**200-07**	Std.
			100-07-04K	.010	**200-07-04**	.010
			100-07-045K	.015	**200-07-045**	.015
			100-07-05K	.020	**200-07-05**	.020
			100-07-06K	.030	**200-07-06**	.030
			100-07-07K	.040	**200-07-07**	.040
65 hp 73-76	3	2.875	**100-15K**	Std.	***200-15**	Std.
Cross Flow			**100-15-04K**	.010	***200-15-04**	.010
W/ Boost Port			**100-15-045K**	.015	***200-15-045**	.015
Low Dome			**100-15-05K**	.020	***200-15-05**	.020
			100-15-06K	.030	***200-15-06**	.030
			100-15-07K	.040	***200-15-07**	.040
70 hp 77-83	3	2.875	**100-15K**	Std.	***200-15**	Std.
Cross Flow			**100-15-04K**	.010	***200-15-04**	.010
W/ Boost Port			**100-15-045K**	.015	***200-15-045**	.015
Low Dome			**100-15-05K**	.020	***200-15-05**	.020
			100-15-06K	.030	***200-15-06**	.030
			100-15-07K	.040	***200-15-07**	.040

For three ring piston use part no.18-3902 for STD, use part no. 18-3916 for 0.015, and use part no. 18-3917 for 0.030

New York • 1-800-222-3375
631-244-8060 • fax 631-244-0556
61 Floyd Run, Bohemia, NY 11716

Puerto Rico
787-832-2499 • fax 787-832-2939
234 Balboa St., Mayaquez, Puerto Rico 00681-2605

e-mail: info@wsmparts.com • www.wsmparts.com

WSM Pistons

PISTON KIT APPLICATION CHART / RING SETS

Model	Cyl.	Bore	Part No.	Pos.	Size	Ring No.	Size
70 hp 87-89	3	3.375	**100-25K**		Std.	**200-25**	Std.
Loop Charge			**100-25-04K**		.010	**200-25-04**	.010
with boost port			**100-25-045K**		.015	**200-25-045**	0.15
bottom guided			**100-25-05K**		.020	**200-25-05**	.020
			100-25-06K		.030	**200-25-06**	.030
			100-25-07K		.040	**200-25-07**	.040
75 hp 84-86	4	2.875	N/A		-	***200-15**	Std.
Cross Flow						***200-15-04**	.010
W/ Boost Port						***200-15-05**	.020
High Dome Not Available						***200-15-06**	.030
Can Use Part No. 100-15 Low Dome						***200-15-07**	.040
75 hp 90-91	3	3.375	**100-25K**	All	Std.	**200-25**	Std.
Loop Charge			**100-25-04K**		.010	**200-25-04**	.010
W/ Boost Port			**100-25-045K**		.015	**200-25-045**	0.15
			100-25-05K		.020	**200-25-05**	.020
			100-25-06K		.030	**200-25-06**	.030
			100-25-07K		.040	**200-25-07**	.040
75 hp 92-93	3	3.375	**100-35K**		Std.	**200-25**	Std.
Loop Charge			**100-35-04K**		.010	**200-25-04**	.010
Top Guided			**100-35-045K**		.015	**200-25-045**	.015
			100-35-05K		.020	**200-25-05**	.020
			100-35-06K		.030	**200-25-06**	.030
			100-35-07K		.040	**200-35-07**	.040
75 hp 94-04	3	3.5	**100-40K**		Std.	**200-20**	Std.
Inline 3			**100-40-04K**		.010	**200-20-04**	.010
Loop Charge			**100-40-045K**		.015	**200-20-045**	.015
Top Guided			**100-40-05K**		.020	**200-20-05**	.020
			100-40-06K		.030	**200-20-06**	.030
			100-40-07K		.040	**200-20-07**	.040
Mercury 1.5 Liter	3	3.6255	**100-27K**		Std.	**200-27**	Std.
DFI / OptiMax			**100-27-045K**		.015	**200-27-045**	.015
			100-27-05K		.020	**200-27-05**	.020
			100-27-06K		.030	**200-27-06**	.030
			100-27-07K		.040	**200-27-07**	.040
80 hp 87-89	3	3.375	**100-25K**		Std.	**200-25**	Std.
Loop Charge			**100-25-04K**		.010	**200-25-04**	.010
W/ Boost Port			**100-25-045K**		.015	**200-25-045**	0.15
			100-25-05K		.020	**200-25-05**	.020
			100-25-06K		.030	**200-25-06**	.030
			100-25-07K		.040	**200-25-07**	.040

For three ring piston use part no.18-3902 for STD, use part no. 18-3916 for 0.015, and use part no. 18-3917 for 0.030

PRECISION
Arizona • 1-800-977-1414
480-966-1550 • fax 480-966-1565
16441 N. 91St. Suite 105 Scottsdale, AZ 85260
Florida • 1-866-417-4072
941-238-0960 • fax 941-238-0965
1899 60th Place East, Bradenton, FL 34203
e-mail: info@wsmparts.com • www.wsmparts.com

WSM Pistons

PISTON KIT APPLICATION CHART / RING SETS

Model	Cyl.	Bore	Part No.	Pos. Size	Ring No.	Size
80 hp 78-83	4	2.875	N/A	-	*200-15	Std.
Cross Flow					*200-15-04	.010
W/ Boost Port					*200-15-05	.020
High Dome Not Available Can					*200-15-06	.030
Use Part No. 100-15 Low Dome					*200-15-07	.040
85 hp 73-77	4	2.875	N/A	-	*200-15	Std.
Cross Flow					*200-15-04	.010
W/ Boost Port					*200-15-05	.020
High Dome Not Available Can					*200-15-06	.030
Use Part No. 100-15 Low Dome					*200-15-07	.040
90 hp 87-91	3	3.375	100-25K	Std.	200-25	Std.
Loop Charge			100-25-04K	.010	200-25-04	.010
W/ Boost Port			100-25-045K	.015	200-25-045	0.15
			100-25-05K	.020	200-25-05	.020
			100-25-06K	.030	200-25-06	.030
			100-25-07K	.040	200-25-07	.040
90 hp 92-93	3	3.375	100-35K	Std.	200-25	Std.
Loop Charge			100-35-04K	.010	200-25-04	.010
Top Guided			100-35-045K	.015	200-25-045	.015
			100-35-05K	.020	200-25-05	.020
			100-35-06K	.030	200-25-06	.030
			100-35-07K	.040	200-25-07	.040
90 hp 94-00	3	3.5	100-40K	Std.	200-20	Std.
Inline 3			100-40-04K	.010	200-20-04	.010
Loop Charge			100-40-045K	.015	200-20-045	.015
			100-40-05K	.020	200-20-05	.020
			100-40-06K	.030	200-20-06	.030
			100-40-07K	.040	200-20-07	.040
90 hp 1.5L	3	3.6255	100-27K	Std.	200-27	Std.
DFI / OptiMax			100-27-045K	.015	200-27-045	.015
			100-27-05K	.020	200-27-05	.020
			100-27-06K	.030	200-27-06	.030
			100-27-07K	.040	200-27-07	.040
100 hp 89-91	4	3.375	100-25K	Std.	200-25	Std.
Inline 4			100-25-04K	.010	200-25-04	.010
Loop Charge			100-25-045K	.015	200-25-045	0.15
			100-25-05K	.020	200-25-05	.020
W/ Boost Port			100-25-06K	.030	200-25-06	.030
Bottom Guided			100-25-07K	.040	200-25-07	.040

New York • 1-800-222-3375
631-244-8060 • fax 631-244-0556
61 Floyd Run, Bohemia, NY 11716
Puerto Rico
787-832-2499 • fax 787-832-2939
234 Balboa St., Mayaquez, Puerto Rico 00681-2605
e-mail: info@wsmparts.com • www.wsmparts.com

WSM Pistons

PISTON KIT APPLICATION CHART / RING SETS

Model	Cyl.	Bore	Part No.	Pos. Size	Ring No.	Size
100 hp 92-93	4	3.375	**100-35K**	Std.	**200-25**	Std.
Inline 4			**100-35-04K**	.010	**200-25-04**	.010
Loop Charge			**100-35-045K**	.015	**200-25-045**	.015
			100-35-05K	.020	**200-25-05**	.020
Top Guided			**100-35-06K**	.030	**200-25-06**	.030
			100-35-07K	.040	**200-25-07**	.040
100 hp 94-01	4	3.5	**100-40K**	Std.	**200-20**	Std.
Inline 4			**100-40-04K**	.010	**200-20-04**	.010
Loop Charge			**100-40-045K**	.015	**200-20-045**	.015
			100-40-05K	.020	**200-20-05**	.020
			100-40-06K	.030	**200-20-06**	.030
			100-40-07K	.040	**200-20-07**	.040
115 hp 92-93	4	3.375	**100-35K**	Std.	**200-25**	Std.
Inline 4			**100-35-04K**	.010	**200-25-04**	.010
Loop Charge			**100-35-045K**	.015	**200-25-045**	0.15
			100-35-05K	.020	**200-25-05**	.020
Top Guided			**100-35-06K**	.030	**200-25-06**	.030
			100-35-07K	.040	**200-25-07**	.040
115 hp 94-04	4	3.5	**100-40K**	Std.	**200-20**	Std.
Inline 4			**100-40-04K**	.010	**200-20-04**	.010
Loop Charge			**100-40-045K**	.015	**200-20-045**	.015
			100-40-05K	.020	**200-20-05**	.020
			100-40-06K	.030	**200-20-06**	.030
			100-40-07K	.040	**200-20-07**	.040
115 hp 89-91	4	3.375	**100-25K**	Std.	**200-25**	Std.
Inline 4			**100-25-04K**	.010	**200-25-04**	.010
Loop Charge			**100-25-045K**	.015		
			100-25-05K	.020	**200-25-05**	.020
W/ Boost Port			**100-25-06K**	.030	**200-25-06**	.030
Bottom Guided			**100-25-07K**	.040	**200-25-07**	.040
115 hp 70-83	6	2.875	N/A	-	***200-15**	Std.
Inline 6					***200-15-04**	.010
Cross Flow					***200-15-05**	.020
High Dome Not Available Can Use Part No. 100-15 Low Dome					***200-15-06**	.030
					***200-15-07**	.040

For three ring piston use part no.18-3902 for STD, use part no. 18-3916 for 0.015, and use part no. 18-3917 for 0.030

PRECISION
Arizona • 1-800-977-1414
480-966-1550 • fax 480-966-1565
16441 N. 91St. Suite 105 Scottsdale, AZ 85260
Florida • 1-866-417-4072
941-238-0960 • fax 941-238-0965
1899 60th Place East, Bradenton, FL 34203
e-mail: info@wsmparts.com • www.wsmparts.com

WSM Pistons

PISTON KIT APPLICATION CHART / RING SETS

Model	Cyl.	Bore	Part No.	Pos.	Size	Ring No.	Size
115 hp 84-88	6	2.875	100-15K		Std.	*200-15	Std.
In Line 6			100-15-04K		.010	*200-15-04	.010
Cross Flow			100-15-05K		.020	*200-15-05	.020
Low Dome			100-15-06K		.030	*200-15-06	.030
			100-15-07K		.040	*200-15-07	.040
115 hp 1.5L	3	3.6255	100-27K		Std.	200-27	Std.
DFI / OptiMax			100-27-045K		.015	200-27-045	.015
			100-27-05K		.020	200-27-05	.020
			100-27-06K		.030	200-27-06	.030
			100-27-07K		.040	200-27-07	.040
115 hp 2.5L OptiMax	6	3.501	100-28PK	Port	Std.	200-28	Std.
			100-28SK	Strbd.	Std.	200-28	Std.
			100-28-045PK	Port	.015	200-28-045	.015
			100-28-045SK	Strbd.	.015	200-28-045	.015
			100-28-06PK	Port	.030	200-28-06	.030
			100-28-06SK	Strbd.	.030	200-28-06	.030
			100-28-07PK	Port	.040	200-28-07	.040
			100-28-07SK	Strbd.	.040	200-28-07	.040
125 hp 94-00	4	3.5	100-40K		Std.	200-20	Std.
Inline 4			100-40-04K		.010	200-20-04	.010
Loop Charge			100-40-045K		.015	200-20-045	.015
			100-40-05K		.020	200-20-05	.020
			100-40-06K		.030	200-20-06	.030
			100-40-07K		.040	200-20-07	.040
135 hp 70-71	6	2.875	N/A		-	*200-15	Std.
Inline 6						*200-15-04	.010
Cross Flow						*200-15-05	.020
High Dome Not Available Can Use Part No. 100-15 Low Dome						*200-15-06	.030
						*200-15-07	.040
135 hp	V-6	3.125	100-50PK	Port	Std.	200-30	Std.
2.0 Liter 81-91			100-50SK	Stbd.	Std.	200-30	Std.
W/ Boost Port			100-50-04PK	Port	.010	200-30-04	.010
Bottom Guided			100-50-04SK	Stbd.	.010	200-30-04	.010
Used With Connecting			100-50-05PK	Port	.020	200-30-05	.020
Rod #636			100-50-05SK	Stbd.	.020	200-30-05	.020
			100-50-06PK	Port	.030	200-30-06	.030
			100-50-06SK	Stbd.	.030	200-30-06	.030
			100-50-07PK	Port	.040	200-30-07	.040
			100-50-07SK	Stbd.	.040	200-30-07	.040

For three ring piston use part no.18-3902 for STD, use part no. 18-3916 for 0.015, and use part no. 18-3917 for 0.030

New York • 1-800-222-3375
631-244-8060 • fax 631-244-0556
61 Floyd Run, Bohemia, NY 11716

Puerto Rico
787-832-2499 • fax 787-832-2939
234 Balboa St., Mayaquez, Puerto Rico 00681-2605

e-mail: info@wsmparts.com • www.wsmparts.com

WSM Pistons

PISTON KIT APPLICATION CHART / RING SETS

Model	Cyl.	Bore	Part No.	Pos.	Size	Ring No.	Size
135 hp	V-6	3.125	100-30PK	Port	Std.	200-30	Std.
2.0 Liter 92-00			100-30SK	Stbd.	Std.	200-30	Std.
W/ Boost Port			100-30-04PK	Port	.010	200-30-04	.010
Top Guided			100-30-04SK	Stbd.	.010	200-30-04	.010
Used With Connecting			100-30-045PK	Port	.015	200-30-045	.015
Rod #644			100-30-045SK	Stbd.	.015	200-30-045	.015
			100-30-05PK	Port	.020	200-30-05	.020
			100-30-05SK	Stbd.	.020	200-30-05	.020
			100-30-06PK	Port	.030	200-30-06	.030
			100-30-06SK	Stbd.	.030	200-30-06	.030
			100-30-07PK	Port	.040	200-30-07	.040
			100-30-07SK	Stbd.	.040	200-30-07	.040
135 hp 2.5L OptiMax	V-6	3.501	100-28PK	Port	Std.	200-28	Std.
OG590000 - OG96499			100-28SK	Stbd.	Std.	200-28	Std.
Used With Connecting			100-28-045PK	Port	.015	200-28-045	.015
Rod #644			100-28-045SK	Stbd.	.015	200-28-045	.015
Fits motors with cylinder head			100-28-06PK	Port	.030	200-28-06	.030
o-rings only			100-28-06SK	Stbd.	.030	200-28-06	.030
			100-28-07PK	Port	.040	200-28-07	.040
			100-28-07SK	Stbd.	.040	200-28-07	.040
140 hp 72	6	2.875	N/A	-	-	*200-15	Std.
Inline 6						*200-15-04	.010
Cross Flow						*200-15-05	.020
High Dome not available						*200-15-06	.030
Use 100-15 Low Dome						*200-15-07	.040
140 hp 78-81	6	2.875	100-15K		Std.	*200-15	Std.
In Line 6			100-15-04K		.010	*200-15-04	.010
			100-15-045K		.015		
Cross Flow			100-15-05K		.020	*200-15-05	.020
W/ Boost Port			100-15-06K		.030	*200-15-06	.030
Low Dome			100-15-07K		.040	*200-15-07	.040
150 hp 73-78	6	2.875	100-15K		Std.	*200-15	Std.
In Line 6			100-15-04K		.010	*200-15-04	.010
			100-15-045K		.015		
Cross Flow			100-15-05K		.020	*200-15-05	.020
W/ Boost Port			100-15-06K		.030	*200-15-06	.030
Low Dome			100-15-07K		.040	*200-15-07	.040
150 hp 79-91	V-6	3.125	100-50PK	Port	Std.	200-30	Std.
2.0 Liter			100-50SK	Stbd.	Std.	200-30	Std.
W/ Boost Port			100-50-04PK	Port	.010	200-30-04	.010
Bottom Guided			100-50-04SK	Stbd.	.010	200-30-04	.010
Used With Connecting			100-50-05PK	Port	.020	200-30-05	.020
Rod #636			100-50-05SK	Stbd.	.020	200-30-05	.020
			100-50-06PK	Port	.030	200-30-06	.030
			100-50-06SK	Stbd.	.030	200-30-06	.030
			100-50-07PK	Port	.040	200-30-07	.040
			100-50-07SK	Stbd.	.040	200-30-07	.040

For three ring piston use part no.18-3902 for STD, use part no. 18-3916 for 0.015, and use part no. 18-3917 for 0.030

PRECISION
Arizona • 1-800-977-1414
480-966-1550 • fax 480-966-1565
16441 N. 91St. Suite 105 Scottsdale, AZ 85260
Florida • 1-866-417-4072
941-238-0960 • fax 941-238-0965
1899 60th Place East, Bradenton, FL 34203
e-mail: info@wsmparts.com • www.wsmparts.com

WSM Pistons

PISTON KIT APPLICATION CHART / RING SETS

Model	Cyl.	Bore	Part No.	Pos.	Size	Ring No.	Size
2.0 Liter	V-6	3.125	100-30SK	Stbd.	Std.	200-30	Std.
W/ Boost Port			100-30-04PK	Port	.010	200-30-04	.010
Top Guided			100-30-04SK	Stbd.	.010	200-30-04	.010
Used With Connecting			100-30-045PK	Port	.015	200-30-045	.015
Rod #644			100-30-045SK	Stbd.	.015	200-30-045	.015
			100-30-05PK	Port	.020	200-30-05	.020
			100-30-05SK	Stbd.	.020	200-30-05	.020
			100-30-06PK	Port	.030	200-30-06	.030
			100-30-06SK	Stbd.	.030	200-30-06	.030
			100-30-07PK	Port	.040	200-30-07	.040
			100-30-07SK	Stbd.	.040	200-30-07	.040
150 hp 2.5L	V-6	3.5	100-19PK	Port	Std.	200-19	Std.
Bottom Guided			100-19SK	Stbd.	Std.	200-19	Std.
Used With Connecting			100-19-04PK	Port	.010	200-19-04	.010
Rod #636			100-19-04SK	Stbd.	.010	200-19-04	.010
			100-19-045PK	Port	.015	200-19-045	.015
			100-19-045SK	Stbd.	.015	200-19-045	.015
			100-19-05PK	Port	.020	200-19-05	.020
			100-19-05SK	Stbd.	.020	200-19-05	.020
			100-19-06PK	Port	.030	200-19-06	.030
			100-19-06SK	Stbd.	.030	200-19-06	.030
			100-19-07PK	Port	.040	200-19-07	.040
			100-19-07SK	Stbd.	.040	200-19-07	.040
150 hp 2.5L	V-6	3.5	100-20PK	Port	Std.	200-20	Std.
XR-6 92-97			100-20SK	Stbd.	Std.	200-20	Std.
and			100-20-04PK	Port	.010	200-20-04	.010
EFI 93-99			100-20-04SK	Stbd.	.010	200-20-04	.010
Top Guided			100-20-045PK	Port	.015	200-20-045	.015
Used With Connecting			100-20-045SK	Stbd.	.015	200-20-045	.015
Rod #644			100-20-05PK	Port	.020	200-20-05	.020
			100-20-05SK	Stbd.	.020	200-20-05	.020
			100-20-06PK	Port	.030	200-20-06	.030
			100-20-06SK	Stbd.	.030	200-20-06	.030
			100-20-07PK	Port	.040	200-20-07	.040
			100-20-07SK	Stbd.	.040	200-20-07	.040
150-175 hp 2.5L V-6		3.501	100-28PK	Port	Std.	200-28	Std.
OptiMax OG960500 - OT178499			100-28SK	Stbd.	Std.	200-28	Std.
Top Guided			100-28-045PK	Port	.015	200-28-045	.015
Used With Connecting			100-28-045SK	Stbd.	.015	200-28-045	.015
Rod #644			100-28-06PK	Port	.030	200-28-06	.030
fits motors with cylinder head			100-28-06SK	Stbd.	.030	200-28-06	.030
orings only			100-28-07PK	Port	.040	200-28-07	.040
			100-28-07SK	Stbd.	.040	200-28-07	.040
175 hp 76-81	V-6	3.125	100-50PK	Port	Std.	200-30	Std.
2.0 Liter			100-50SK	Stbd.	Std.	200-30	Std.
Loop Charge			100-50-04PK	Port	.010	200-30-04	.010
W/ Boost Port			100-50-04SK	Stbd.	.010	200-30-04	.010
Bottom Guided			100-50-05PK	Port	.020	200-30-05	.020
Used With Connecting			100-50-05SK	Stbd.	.020	200-30-05	.020
Rod #636			100-50-06PK	Port	.030	200-30-06	.030
			100-50-06SK	Stbd.	.030	200-30-06	.030
			100-50-07PK	Port	.040	200-30-07	.040
			100-50-07SK	Stbd.	.040	200-30-07	.040

New York • 1-800-222-3375
631-244-8060 • fax 631-244-0556
61 Floyd Run, Bohemia, NY 11716
Puerto Rico
787-832-2499 • fax 787-832-2939
234 Balboa St., Mayaquez, Puerto Rico 00681-2605
e-mail: info@wsmparts.com • www.wsmparts.com

WSM Pistons

PISTON KIT APPLICATION CHART / RING SETS

Model	Cyl.	Bore	Part No.	Pos.	Size	Ring No.	Size
175 hp 78-91	V-6	3.375	14315G	Port	Std	200-10CH	Std
2.4 Liter Chrome block			14325G	Stbd.	Std	200-10CH	Std
175 hp 78-91	V-6	3.375	14310G	Port	Std.	200-10	Std.
2.4 Liter Cast			14320G	Stbd.	Std.	200-10	Std.
Iron Resleeve			100-10-04PK	Port	.010	200-10-04	.010
			100-10-04SK	Stbd.	.010	200-10-04	.010
			100-10-05PK	Port	.020	200-10-05	.020
			100-10-05SK	Stbd.	.020	200-10-05	.020
			100-10-06PK	Port	.030	200-10-06	.030
			100-10-06SK	Stbd.	.030	200-10-06	.030
			100-10-07PK	Port	.040	200-10-07	.040
			100-10-07SK	Stbd.	.040	200-10-07	.040
175 hp 92-00	V-6	3.5	100-20PK	Port	Std.	200-20	Std.
2.5 Liter, Off shore EFI			100-20SK	Stbd.	Std.	200-20	Std.
XR1, XR2, Magnum			100-20-04PK	Port	.010	200-20-04	.010
Top Guided			100-20-04SK	Stbd.	.010	200-20-04	.010
Used With Connecting			100-20-045PK	Port	.015	200-20-045	.015
Rod #644			100-20-045SK	Stbd.	.015	200-20-045	.015
			100-20-05PK	Port	.020	200-20-05	.020
			100-20-05SK	Stbd.	.020	200-20-05	.020
			100-20-06PK	Port	.030	200-20-06	.030
			100-20-06SK	Stbd.	.030	200-20-06	.030
			100-20-07PK	Port	.040	200-20-07	.040
			100-20-07SK	Stbd.	.040	200-20-07	.040
Big Pin DFI 2.5 Litre	V-6	3.501	100-49PK	Port	Std.	200-49	Std.
OT 178500-Up			100-49SK	Stbd.	Std.	200-49	Std.
Used WIth Connecting			100-49-045PK	Port	.015	200-49-045	.015
Rod #600			100-49-045SK	Stbd.	.015	200-49-045	.015
			100-49-06PK	Port	.030	200-49-06	.030
			100-49-06SK	Stbd.	.030	200-49-06	.030
			100-49-07PK	Port	.040	200-49-07	.040
			100-49-07SK	Stbd.	.040	200-49-07	.040
200 hp 78-90	V-6	3.375	14315G	Port	Std	200-10CH	Std
2.4 Liter Chrome Block			14325G	Stbd.	Std	200-10CH	Std
200 hp 78-90	V-6	3.375	14310G	Port	Std.	200-10	Std.
2.4 Liter			14320G	Stbd.	Std.	200-10	Std.
Cast Iron Resleeve			100-10-04PK	Port	.010	200-10-04	.010
Loop Charge			100-10-04SK	Stbd.	.010	200-10-04	.010
W/ Finger Ports			100-10-05PK	Port	.020	200-10-05	.020
			100-10-05SK	Stbd.	.020	200-10-05	.020
			100-10-06PK	Port	.030	200-10-06	.030
			100-10-06SK	Stbd.	.030	200-10-06	.030
			100-10-07PK	Port	.040	200-10-07	.040
			100-10-07SK	Stbd.	.040	200-10-07	.040

PRECISION
Arizona • 1-800-977-1414
480-966-1550 • fax 480-966-1565
16441 N. 91St. Suite 105 Scottsdale, AZ 85260
Florida • 1-866-417-4072
941-238-0960 • fax 941-238-0965
1899 60th Place East, Bradenton, FL 34203
e-mail: info@wsmparts.com • www.wsmparts.com

WSM Pistons

PISTON KIT APPLICATION CHART / RING SETS

Model	Cyl.	Bore	Part No.	Pos.	Size	Ring No.	Size
200 hp	V-6	3.501	100-19PK	Port	Std.	200-19	Std.
2.5 Liter			100-19SK	Stbd.	Std.	200-19	Std.
Bottom Guided			100-19-04PK	Port	.010	200-19-04	.010
Used With Connecting			100-19-04SK	Stbd.	.010	200-19-04	.010
Rod #636			100-19-045PK	Port	.015	200-19-045	.015
			100-19-045SK	Stbd.	.015	200-19-045	.015
			100-19-05PK	Port	.020	200-19-05	.020
			100-19-05SK	Stbd.	.020	200-19-05	.020
			100-19-06PK	Port	.030	200-19-06	.030
			100-19-06SK	Stbd.	.030	200-19-06	.030
			100-19-07PK	Port	.040	200-19-07	.040
			100-19-07SK	Stbd.	.040	200-19-07	.040
200 hp 92-00	V-6	3.5	100-20PK	Port	Std.	200-20	Std.
2.5 Liter XR-1,			100-20SK	Stbd.	Std.	200-20	Std.
EFI, Off shore			100-20-04PK	Port	.010	200-20-04	.010
Top Guided			100-20-04SK	Stbd.	.010	200-20-04	.010
Used With Connecting			100-20-045PK	Port	.015	200-20-045	.015
Rod #644			100-20-045SK	Stbd.	.015	200-20-045	.015
			100-20-05PK	Port	.020	200-20-05	.020
			100-20-05SK	Stbd.	.020	200-20-05	.020
			100-20-06PK	Port	.030	200-20-06	.030
			100-20-06SK	Stbd.	.030	200-20-06	.030
			100-20-07PK	Port	.040	200-20-07	.040
			100-20-07SK	Stbd.	.040	200-20-07	.040
150-175 hp	V-6	3.500	100-49PK	Port	Std.	200-49	Std.
2.5 Liter DFI			100-49SK	Stbd.	Std	200-49	Std.
OT178500-Up			100-49-045PK	Port	.015	200-49-045	.015
Used With Connecting			100-49-045SK	Stbd.	.015	200-49-045	.015
Rod #600			100-49-06PK	Port	.030	200-49-06	.030
			100-49-06SK	Stbd.	.030	200-49-06	.030
			100-49-07PK	Port	.040	200-49-07	.040
			100-49-07SK	Stbd.	.040	200-49-07	.040
WSM High Performance	V-6	3.500	100-21PK	Port	Std.	200-19	Std.
Piston Mercury 3.5"			100-21SK	Stbd.	Std.	200-19	Std.
Top guided 2.5 Liter			100-21-04PK	Port	.010	200-19-04	.010
with 1.5mm Rings			100-21-04SK	Stbd.	.010	200-19-04	.010
for use with 644 Rod			100-21-045PK	Port	.015	200-19-045	.015
			100-21-045SK	Stbd.	.015	200-19-045	.015
			100-21-06PK	Port	.030	200-19-06	.030
			100-21-06SK	Stbd.	.030	200-19-06	.030
			100-21-07PK	Port	.040	200-19-07	.040
			100-21-07SK	Stbd.	.040	200-19-07	.040

New York • 1-800-222-3375
631-244-8060 • fax 631-244-0556
61 Floyd Run, Bohemia, NY 11716
Puerto Rico
787-832-2499 • fax 787-832-2939
234 Balboa St., Mayaquez, Puerto Rico 00681-2605
e-mail: info@wsmparts.com • www.wsmparts.com

WSM Pistons

PISTON KIT APPLICATION CHART / RING SETS

Model	Cyl.	Bore	Part No.	Pos.	Size	Ring No.	Size
200 hp 3.0L OptiMax	V-6	3.6265	100-47PK	Port	Std.	200-27	Std.
200 hp pro XS			100-47SK	Stbd.	Std.	200-27	Std.
OT599000 - Up			100-47-045PK	Port	.015	200-27-045	.015
Oval Pocket on			100-47-045SK	Stbd.	.015	200-27-045	.015
Top of Piston			100-47-06PK	Port	.030	200-27-06	.030
			100-47-06SK	Stbd.	.030	200-27-06	.030
			100-47-07PK	Port	.040	200-27-07	.040
			100-47-07SK	Stbd.	.040	200-27-07	.040
200 hp 3.0L OptiMax	V-6	3.6265	100-48PK	Port	STD	200-48	STD
200 hp Pro XS			100-48SK	Stbd.	Std	200-48	Std
2000-04			100-48-045PK	Port	.015	200-48-045	.015
Round Pocket on			100-48-045SK	Stbd.	.015	200-48-045	.015
Top of Piston			100-48-06PK	Port	.030	200-48-06	.030
			100-48-06SK	Stbd.	.030	200-48-06	.030
			100-48-07PK	Port	.040	200-48-07	.040
			100-48-07SK	Stbd.	.040	200-48-07	.040
225 hp 80-81	V-6	3.375	14315G	Port	Std	200-10CH	Std
2.4 Liter Chrome block			14325G	Stbd.	Std	200-10CH	Std
225 hp 80-81	V-6	3.375	14310G	Port	Std.	200-10	Std.
2.4 Liter			14320G	Stbd.	Std.	200-10	Std.
Cast Iron Sleeve			100-10-04PK	Port	.010	200-10-04	.010
Loop Charge			100-10-04SK	Stbd.	.010	200-10-04	.010
			100-10-05PK	Port	.020	200-10-05	.020
			100-10-05SK	Stbd.	.020	200-10-05	.020
			100-10-06PK	Port	.030	200-10-06	.030
			100-10-06SK	Stbd.	.030	200-10-06	.030
			100-10-07PK	Port	.040	200-10-07	.040
			100-10-07SK	Stbd.	.040	200-10-07	.040
225 hp 3.0L Optimax	V6	3.6265	100-48PK	Port	Std	200-48	Std
1998-04			100-48SK	Stbd.	Std	200-48	Std
Round Pocket On Top			100-48-045PK	Port	.015	200-48-05	.015
Of Piston			100-48-045SK	Stbd.	.015	200-48-05	.015
			100-48-06PK	Port	.030	200-48-06	.030
			100-48-06SK	Stbd.	.030	200-48-06	.030
			100-48-07PK	Port	.040	200-48-07	.040
			100-48-07SK	Stbd.	.040	200-48-07	.040
3.0 Liter 94-99	V-6	3.625	100-45PK	Port	Std.	200-45	Std.
Carbureted and EFI			100-45SK	Stbd.	Std.	200-45	Std.
			100-45-04PK	Port	.010	200-45-04	.010
			100-45-04SK	Stbd.	.010	200-45-04	.010
			100-45-045PK	Port	.015	-	
			100-45-045SK	Stbd.	.015	-	
			100-45-05PK	Port	.020	200-45-05	.020
			100-45-05SK	Stbd.	.020	200-45-05	.020
			100-45-06PK	Port	.030	200-45-06	.030
			100-45-06SK	Stbd.	.030	200-45-06	.030
			100-45-07PK	Port	.040	200-45-07	.040
			100-45-07SK	Stbd.	.040	200-45-07	.040

PRECISION
Arizona • 1-800-977-1414
480-966-1550 • fax 480-966-1565
16441 N. 91St. Suite 105 Scottsdale, AZ 85260
Florida • 1-866-417-4072
941-238-0960 • fax 941-238-0965
1899 60th Place East, Bradenton, FL 34203
e-mail: info@wsmparts.com • www.wsmparts.com

WSM Pistons

PISTON KIT APPLICATION CHART / RING SETS

Model	Cyl.	Bore	Part No.	Pos.	Size	Ring No.	Size
250 hp 3.0L OptiMax	V-6	3.6265	100-47PK	Port	Std.	200-27	Std.
Oval Pocket On Top			100-47SK	Stbd.	Std.	200-27	Std.
Of Piston			100-47-045PK	Port	.015	200-27-045	.015
			100-47-045SK	Stbd.	.015	200-27-045	.015
			100-47-06PK	Port	.030	200-27-06	.030
			100-47-06SK	Stbd.	.030	200-27-06	.030
			100-47-07PK	Port	.040	200-27-07	.040
			100-47-07SK	Stbd.	.040	200-27-07	.040
250XB, 300X	V-6	3.6265	100-45PK	Port	Std.	200-45	Std.
3.0 Liter EFI			100-45SK	Stbd.	Std.	200-45	Std.
OG980600 - 0T800999			100-45-04PK	Port	.010	200-45-04	.010
			100-45-04SK	Stbd.	.010	200-45-04	.010
			100-45-045PK	Port	.015	200-45-045	.015
			100-45-045SK	Stbd.	.015	200-45-045	.015
			100-45-05PK	Port	.020	200-45-05	.020
			100-45-05SK	Stbd.	.020	200-45-05	.020
			100-45-06PK	Port	.030	200-45-06	.030
			100-45-06SK	Stbd.	.030	200-45-06	.030
			100-45-07PK	Port	.040	200-45-07	.040
			100-45-07SK	Stbd.	.040	200-45-07	.040
225 / 250 PRO XS	V-6	3.6265	100-51PK	Port	Std.	200-27	Std.
3.0 Liter DFI			100-51SK	Stbd.	Std.	200-27	Std.
			100-51-04PK	Port	.010	200-45-04	.010
			100-51-04SK	Stbd.	.010	200-45-04	.010
			100-51-045PK	Port	.015	200-27-045	.015
			100-51-045SK	Stbd.	.015	200-27-045	.015
			100-51-05PK	Port	.020	200-45-05	.020
			100-51-05SK	Stbd.	.020	200-45-05	.020
			100-51-06PK	Port	.030	200-27-06	.030
			100-51-06SK	Stbd.	.030	200-27-06	.030
			100-51-07PK	Port	.040	200-27-07	.040
			100-51-07SK	Stbd.	.040	200-27-07	.040
300XS	V-6	3.6265	100-51PK	Port	Std.	200-27	Std.
3.2 Liter Stroker			100-51SK	Stbd.	Std.	200-27	Std.
			100-51-04PK	Port	.010	200-45-04	.010
			100-51-04SK	Stbd.	.010	200-45-04	.010
			100-51-045PK	Port	.015	200-27-045	.015
			100-51-045SK	Stbd.	.015	200-27-045	.015
			100-51-05PK	Port	.020	200-45-05	.020
			100-51-05SK	Stbd.	.020	200-45-05	.020
			100-51-06PK	Port	.030	200-27-06	.030
			100-51-06SK	Stbd.	.030	200-27-06	.030
			100-51-07PK	Port	.040	200-27-07	.040
			100-51-07SK	Stbd.	.040	200-27-07	.040

New York • 1-800-222-3375
631-244-8060 • fax 631-244-0556
61 Floyd Run, Bohemia, NY 11716
Puerto Rico
787-832-2499 • fax 787-832-2939
234 Balboa St., Mayaquez, Puerto Rico 00681-2605
e-mail: info@wsmparts.com • www.wsmparts.com

Crankshafts

850-198

Model	Cyl.	Year	O.E No.	Part No.
50-60 hp	3	00-Up	827954T3	**850-180**
75-90 hp	3	99-Up	827616T1	**850-198**

Connecting Rods

Part No. 800-202
O.E. 638-9002A2
L3 & L4 Bottom Guided
Replacement Rod Bolt: 805-204
O.E. No. 10-94320

Part No. 800-206
O.E. 640-9612A 7
Fits: 30-40 hp 2 Cyl.
Replacement Rod Bolt: 805-200
O.E. No. 10-91012

Part No. 800-204
O.E. 646-818846A 3
L3 & L4 Top Guided
Replacement Rod Bolt: 805-204
O.E. No. 10-94320

Part No. 800-210
O.E. 644-818141A 2
135-225 HP 2.0 & 2.5L
V-6 1991 & Up Top Guided
Replacement Rod Bolt: 805-210
O.E. No. 10-76349 1

Replacement Rod Bolt: 805-208
O.E. No. 10-93886
Bottom Guided V6

PRECISION
Arizona • 1-800-977-1414
480-966-1550 • fax 480-966-1565
16441 N. 91St. Suite 105 Scottsdale, AZ 85260
Florida • 1-866-417-4072
941-238-0960 • fax 941-238-0965
1899 60th Place East, Bradenton, FL 34203
e-mail: info@wsmparts.com • www.wsmparts.com

Connecting Rods

Part No.800-212
O.E. 647-822373A7, 647-822373A09
V-6 3.0L 1994 & Up
Replacement Rod Bolt: 805-204
O.E. No. 10-94320

Head Bolts

HEAD BOLT
Part No. 820-105
O.E. No. 10-859096
3.0 Liter V-6 (40 required per motor)

HEAD BOLT
Part No. 820-100
O.E. No. 10-878217
2.5 L (24 required per motor)

Oil Injection Block Offs

OIL BLOCK OFF KIT
Part No. 825-500K
V-6
2.OL-2.5L

Image Not Available

OIL BLOCK OFF KIT
Part No. 825-505K
3.0 Liter V-6

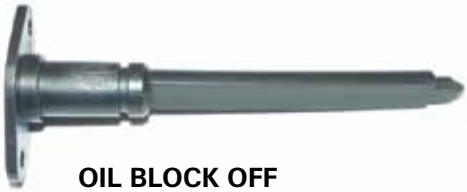

OIL BLOCK OFF
Part No. 825-500
(O-Ring & Bolt's Sold Separate)
O.E. No. 43453
2.0L-2.5L V-6

O-RING
Part No. 526-23
O.E 25-32509

OIL BLOCK OFF SCREW
Part No. 810-250
O.E. No. 10-41506

OIL BLOCK OFF
Part No. 011-212
L3-L4 75-125 hp

New York • 1-800-222-3375
631-244-8060 • fax 631-244-0556
61 Floyd Run, Bohemia, NY 11716
Puerto Rico
787-832-2499 • fax 787-832-2939
234 Balboa St., Mayaquez, Puerto Rico 00681-2605
e-mail: info@wsmparts.com • www.wsmparts.com

Bearings

Upper Rod Bearing Picture Gallery

Upper Rod Bearing Needles
Part No. 010-134-27
O.E No. 29-98295
15-25 hp

Upper Rod Bearing Needles & Washers
Part No. 010-136-29
O.E. 29-47270 & 12-47247
Inline

Upper Rod Bearing Needles & Washers
Part No. 010-136-29T
O.E. No. 29-47270 & 12-812876
Fits: Top Guided Connecting Rod

Upper Rod Bearing Needles
Part No. 010-120-29
O.E. No. 29-88258
Fits: Bottom Guided L3, L4

Upper Rod Bearing Needles & Washers
Part No. 010-142-29
O.E. 29-818391
Top Guided L3-L4

Upper Rod Bearing Needles & Washers
Part No. 010-125-29
O.E. 29-67483
Fits: V6 Bottom Guided

Upper Rod Bearing Needles & Washers
Part No. 010-137-29
O.E. 29-822553
Fits: V6 Top Guided

Upper Rod Bearing Needles
Part No. 010-137-34
O.E. 29-822553
Fits: 2.5L Big Pin Rod #600

Upper Rod Bearing Needles & Washers
Part No. 010-120-34
O.E No. 29-88258, 12-88263
3.0 Liter

PRECISION
Arizona • 1-800-977-1414
480-966-1550 • fax 480-966-1565
16441 N. 91St. Suite 105 Scottsdale, AZ 85260
Florida • 1-866-417-4072
941-238-0960 • fax 941-238-0965
1899 60th Place East, Bradenton, FL 34203
e-mail: info@wsmparts.com • www.wsmparts.com

Bearings

Lower Rod Bearing Picture Gallery

Lower Rod Bearing Needles
Part No. 010-135-25
O.E. 29-20046

Lower Rod Bearing Needles
Part No. 010-138-16
O.E. 31-62596A1

Lower Rod Split Rollers
Part No. 010-138
O.E. No. 31-62596A 1

Lower Rod Bearing Split Rollers
Part No. 010-150-01
Fits: 30-60 hp 2&3 Cyl, V6
O.E. No. 31-17514A1

Lower Rod Bearing Split Rollers
Part No. 010-151
O.E. 31-43012A1
L3-L4 3.0 Liter

Lower Rod Bearing Needles
Part No. 010-151-16

Upper Main Bearing Picture Gallery

Upper Main Bearing
Part No. 010-147
O.E No. 31-85114 T
15-25 hp 2 Cyl.

Upper Main Bearing
Part No. 010-255
O.E. 812873A1
Early 30-60 hp 2&3 Cyl

Upper Main Bearing
Part No. 010-255-01
O.E No. 818889A 1
Late 30-60 hp 3 Cyl.
99 & Up

Upper Main Bearing
Part No. 010-221-01
O.E. 30-63742

New York • 1-800-222-3375
631-244-8060 • fax 631-244-0556
61 Floyd Run, Bohemia, NY 11716
Puerto Rico
787-832-2499 • fax 787-832-2939
234 Balboa St., Mayaquez, Puerto Rico 00681-2605
e-mail: info@wsmparts.com • www.wsmparts.com

Bearings

Upper Main Bearing Picture Gallery

Upper Main Bearing L3-L4
Part No. 010-257
O.E No. 31-43013T 3

Upper Main
Part No. 010-256
O.E. 30-62567
In line 6 Cyl.

Upper Main Bearing
Part No. 010-263
O.E. 31-16756A4
2.0L & 2.5L V-6 with
1 3/8" Shaft

Upper Main Bearing
V6 with 1-1/2" Shaft
Part No. 010-265
O.E. 31-74248

Upper Main Bearing
Part No. 010-254
75-115 hp 1.5 Liter DFI
O.E No 31-879853A01

Upper Main Bearing
3.0 Liter
Part No. 010-259
O.E No. 31-816773A 2

Center Main Bearing Picture Gallery

Center Main Bearing
Part No. 010-266
O.E No. 86992A 5
15-25 hp

Center Main Bearing
Part No. 010-267
O.E No. 827955A 2
3 Cyl. 50-60 hp

Center Main (Needles Only)
Part No. 010-135-28
O.E. N/A
Inline, Up to 1978

Center Main Bearing
Part No. 010-132-56
O.E. 29-71422
Inline Late

Center Main Bearing
Part No. 010-148
O.E No. 812881A1
50-60 hp 3 Cyl.

Center Main (Needles Only)
Part No. 010-143-28
For 010-148) 3 Cyl. 50-60 hp

Center Main Bearing
Part No. 010-143
O.E No. 42943A 1
Fits: L3-L4 75-125 Hp

Center Main(Needles Only)
Part No. 010-143-32
Fits: L3-L4 75-125 Hp

PRECISION
Arizona • 1-800-977-1414
480-966-1550 • fax 480-966-1565
16441 N. 91St. Suite 105 Scottsdale, AZ 85260
Florida • 1-866-417-4072
941-238-0960 • fax 941-238-0965
1899 60th Place East, Bradenton, FL 34203
e-mail: info@wsmparts.com • www.wsmparts.com

Bearings

Center Main Bearing Picture Gallery

Center Main Outer Race
Part No. 010-143-02
Fits: L3-L4

Center Main Bearing
Part No. 010-149
75-115 hp 1.5 Liter DFI
O.E 879848A01

Center Main Bearing
Part No. 010-262
O.E. 31-16756A6
V6 2.5 Liter

Center Main Bearing
Part No. 010-281
O.E. 31-88903

Center Main Bearing
Part No. 010-281-01
O.E. 31-67445

Center Main Bearing
Part No. 010-281-02
O.E. N/A

Center Main Bearing
Part No. 010-144
O.E No. 817001A 1
3.0 Liter, Early

Center Main Bearing
Part No. 010-282
3.0 Liter V6 Late Style
O.E 31-88270A1 ,
31-88270A1 A02

Needles Only
Part No. 010-143-44
3.0 Liter, Early

Outer Race
Part No. 010-144-02
(For 010-144)
3.0 Liter, Early

Lower Main Bearing Picture Gallery

Lower Main Bearing
Part No. 010-146
O.E No. 32-85113T
15-25 hp

Lower Main Bearing
Part No. 010-221-01
O.E. 30-63742

Lower Main Bearing
Part No. 010-206-01
O.E. 30-64224

Lower Main Bearing
Part No. 010-207-04
O.E. 30-43011

Part No. 010-207-05
O.E. 30-67923

New York • 1-800-222-3375
631-244-8060 • fax 631-244-0556
61 Floyd Run, Bohemia, NY 11716
Puerto Rico
787-832-2499 • fax 787-832-2939
234 Balboa St., Mayaquez, Puerto Rico 00681-2605
e-mail: info@wsmparts.com • www.wsmparts.com

Bearings

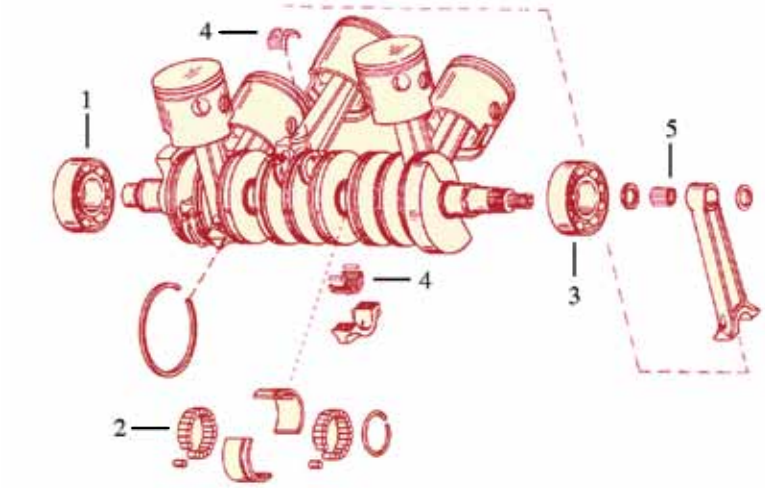

Horse Power	Model	Year	Cyl.	Ref# 1 Lower Main Bearing	Ref# 2 Center Main Cmplate	Ref# 2 CenterMain Split Caged	Ref# 2 Center Main Needles Only	Ref# 3 Center Main Outer Race	Ref# 3 Upper Main Bearing	Ref# 4 Lower Rod Split Caged	Ref# 4 Lower Rod Needles Only	Ref# 5 Upper Rod Needles	Ref# 5 Upper Rod Caged
10	1290910-1455239		2	010-221-01							010-135-25		
15	1288910-1341997		2	010-221-01							010-135-25		
15-25		83 & UP	2	010-146	010-266				010-147			010-134-27	
20	1292910-6443972		2	010-146					010-147		010-135-25		
25	1267499-1499331		2	010-146					010-147		010-135-25		
30-40	OG053314 & up	91 & up	2	010-221-01						010-150-01		010-136-29T	
30-40	OG590000 & up	98 & up	3	010-221-01	010-267				010-255-01	010-150-01		010-136-29T	
35	1356948 & UP		2	010-221-01						010-138	010-138-16		
35	1356948-1448139		4	010-221-01			010-132-56				010-135-25		
40	2874704-C159099	70-88	2	010-221-01						010-138	010-138-16	010-136-29	
40	C15920 & UP	89	4	010-221-01			010-132-56		010-221-01		010-135-25		
45	5531630 & up		4	010-221-01			010-143-28		010-221-01		010-135-25		
50	1421113-5193258	62-78	4	010-221-01			010-135-28		010-221-01		010-135-25		
50	5193259-5531629	79-80	4	010-221-01			010-132-56		010-221-01		010-135-25		
50	6428681-C221500	84-90	3	010-206-01			010-132-56		010-206-01	010-138	010-138-16	010-136-29	
50	D000750 & up	91-97	3	010-221-01	010-148		010-143-28	010-148-02	010-255	010-150-01		010-136-29T	
50	OG590000 & up	98 & up	3	010-221-01	010-267				010-255-01	010-150-01	010-136-29	010-136-29T	
60	6428681-C221500	81-90	3	010-206-01			010-132-56		010-206-01	010-138	010-138-16	010-136-29	
60	D000750 & up	91-97	3	010-221-01	010-148		010-143-28	010-148-02	010-255	010-150-01		010-136-29T	
60	OG590000 & up	98 & up	3	010-221-01	010-267		010-143-28		010-255-01	010-150-01		010-136-29T	
65	3293184-4571651	72-76	3	010-206-01			010-132-56		010-206-01		010-135-25	010-136-29	
70	4571652-6428680	77-78	3	010-206-01			010-132-56		010-206-01	010-138	010-138-16	010-136-29	
70	B110054-C221499	87-89	3	010-207-04	010-143		010-143-32	010-143-02	010-257	010-151	010-151-16	010-120-29	
70	D082000 & up	92-00	3	010-207-04	010-143		010-143-32	010-143-02	010-257	010-151	010-151-16	010-142-29	

PRECISION
Arizona • 1-800-977-1414
480-966-1550 • fax 480-966-1565
16441 N. 91St. Suite 105 Scottsdale, AZ 85260
Florida • 1-866-417-4072
941-238-0960 • fax 941-238-0965
1899 60th Place East, Bradenton, FL 34203
e-mail: info@wsmparts.com • www.wsmparts.com

Bearings

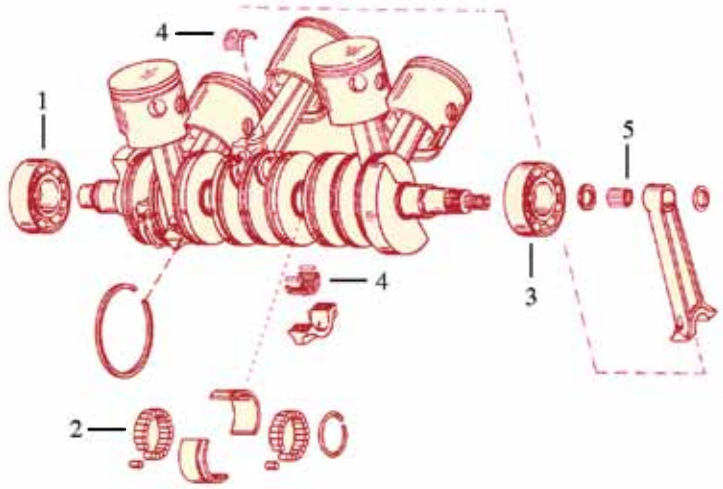

Horse Power	Model	Year	Cyl.	Ref# 1 Lower Main Bearing	Ref# 2 Center Main Cmplate	Ref# 2 CenterMain Split Caged	Ref# 2 Center Main Needles Only	Ref# 3 Center Main Outer Race	Ref# 3 Upper Main Bearing	Ref# 4 Lower Rod Split Caged	Ref# 4 Lower Rod Needles Only	Ref# 5 Upper Rod Needles	Ref# 5 Upper Rod Caged
75	6432901-A996141	75-86	4	010-221-01			010-132-56		010-256	010-138	010-136	010-136-29	
75	C221500-D000750	90-91	3	010-207-04	010-143		010-143-32	010-143-02		010-151		010-120-29	
75	D082000 & up	92-97	3	010-207-04	010-143		010-143-32	010-143-02		010-151		010-142-29	
75 DFI	OT801000 & up	04-12	3	010-207-04	010-149		010-149		010-254	010-151	010-151-16	010-120-34	
80	2559001-6459001	69-83	4	010-221-01			010-132-56		010-256	010-138	010-138-16	010-136-29	
80	A966142-C221499	87-89	3	010-207-04	010-143		010-143-32	010-143-02	010-257	010-151	010-151-16	010-120-29	
80	D08200 & Up	92-97	3	010-207-04	010-143		010-143-32	010-143-02	010-257	010-151	010-151-16	010-142-29	
85	3493913-4831998	73-77	4	010-221-01			010-132-56		010-256	010-138	010-138-16	010-136-29	
90	4845301-A996141	early	6	010-221-01			010-132-56		010-256	010-138	010-138-16	010-136-29	
90	B10054-D000750	87-91	3	010-207-04	010-143		010-143-32	010-143-02	010-257	010-151	010-151-16	010-120-29	
90	D082000 & up	92-00	3	010-207-04	010-143		010-143-32	010-143-02	010-257	010-151	010-151-16	010-142-29	
90 DFI	OT801000 & up	04-12		010-207-04	010-149				010-254	010-151	010-151-16	010-120-34	
100	2641855-3253111	early	6	010-221-01			010-132-56		010-256	010-138	010-138-16	010-136-29	
100	C100000 & up	88-91	4	010-207-04	010-143		010-143-32	010-143-02	010-257	010-151	010-151-16	010-120-29	
100		92-00	4	010-207-04	010-143		010-143-32	010-143-02	010-257	010-151	010-151-16	010-142-29	
115	2836019-B209467	70-87	6	010-221-01			010-132-56		010-256	010-138	010-138-16	010-136-29	
115	C100000-D000750	88-91	4	010-207-04	010-143		010-143-32	010-143-02	010-257	010-151	010-151-16	010-120-29	
115	D082000 & up	92-00	4	010-207-04	010-143		010-143-32	010-143-02	010-257	010-151	010-151-16	010-142-29	
115 DFI	OT801000 & up	04-12	3	010-207-04	010-149				010-254	010-151	010-151-16	010-120-34	
125	2314956-3253111	1968	6	010-221-01			010-132-56		010-256	010-138	010-138-16	010-136-29	
135	2839369-3293233	70-85	6	010-221-01			010-132-56		010-256	010-138	010-138-16	010-136-29	
135	A909997-C239552	86-90	V6	010-207-05						010-150-01		010-125-29	
135	C239533-D000750	91	V6	010-207-05	010-262				010-263	010-150-01		010-125-29	
135 2.0L	D08200 & up	92-96	V6	010-207-05	010-262				010-263	010-150-01		010-137-29	
135-175 DFI	0G590000-OT178499	2.5L	V6	010-207-05	010-262				010-263	010-150-01		010-137-29	
135-175 DFI	OT178500 & Up	2.5L	V6	010-207-05	010-262				010-263	010-150-01		010-137-29	

New York • 1-800-222-3375
631-244-8060 • fax 631-244-0556
61 Floyd Run, Bohemia, NY 11716
Puerto Rico
787-832-2499 • fax 787-832-2939
234 Balboa St., Mayaquez, Puerto Rico 00681-2605
e-mail: info@wsmparts.com • www.wsmparts.com

Bearings

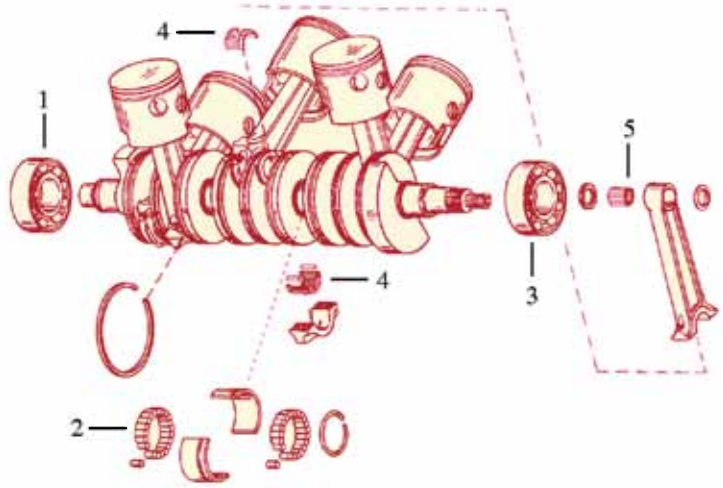

Horse Power	Model	Year	Cyl.	Ref# 1 Lower Main Bearing	Ref# 2 Center Main Cmplate	Ref# 2 CenterMain Split Caged	Ref# 2 Center Main Needles Only	Ref# 3 Center Main Outer Race	Ref# 3 Upper Main Bearing	Ref# 4 Lower Rod Split Caged	Ref# 4 Lower Rod Needles Only	Ref# 5 Upper Rod Needles	Ref# 5 Upper Rod Caged
140	3293234 & Up	1972	6	010-221-01			010-132-56		010-256	010-138	010-138-16	010-136-29	
150	3502806-5327662	73-79	6	010-221-01			010-132-56		010-256	010-138	010-138-16	010-136-29	
150	4868998-A904645	78-85	V6	010-207-05	010-281	010-281-01		010-281-02	010-265	010-150-01		010-125-29	
150	A900466-B242854	86-90	V6	010-207-05						010-150-01		010-125-29	
150 2.0L	C239553-D000750	91	V6	010-207-05	010-262				010-263	010-150-01		010-125-29	
150 2.0L	D082000 & up	92-97	V6	010-207-05	010-262				010-263	010-150-01		010-137-29	
150 XR4	C239553 & up	91	V6	010-207-05	010-262				010-263	010-150-01		010-125-29	
150 XR6 2.5L	D082000 & up	92-97	V6	010-207-05	010-262				010-263	010-150-01		010-137-29	
150 2.5L DFI	OT178499		V6	010-207-05	010-262				010-263	010-150-01		010-137-34	
175	4301235-6618750	76-84	V6	010-207-05	010-281	010-281-01		010-281-02	010-265	010-150-01		010-125-29	
175 2.4L	6618751-C239533	85-90	V6	010-207-05						010-150-01		010-125-29	
175 2.5L	C221500-D000750	90-91	V6	010-207-05	010-262				010-263	010-150-01		010-125-29	
175 2.5L	D082000 & up	92-97	V6	010-207-05	010-262				010-263	010-150-01		010-137-29	
175 2.5L DFI	OT178500 & Up		V6	010-207-05	010-262				010-263	010-150-01		010-137-29	
200	483904-6073191	78-81	V6	010-207-05	010-281	010-281-01		010-281-02	010-265	010-150-01		010-125-29	
200	6073192-C291519	82-90	V6	010-207-05						010-150-01		010-125-29	
200 2.5L	C291519-C291520	90-91	V6	010-207-05	010-262				010-263	010-150-01		010-125-29	
200 2.5L	D082000 & up	92 & up	V6	010-207-05	010-262				010-263	010-150-01		010-137-29	
220 2.4L	B117316 & up	87-88	V6	010-207-05						010-150-01		010-125-29	
225	5626028 & up		V6	010-207-05						010-150-01		010-125-29	
250XS (DFI)		98 & up	V6	010-207-05	010-282	010-282-01		010-282-02	010-259	010-151	010-151-16	010-120-34	
300XS (DFI)		98 & up	V6	010-207-05	010-282	010-282-01		010-282-02	010-259	010-151	010-151-16	010-120-34	
3.0L		94-98	V6	010-207-05	010-144		010-143-44	010-144-02	010-259	010-151	010-151-16	010-120-34	
3.0L		98 & up	V6	010-207-05	010-282	010-282-01		010-282-02	010-259	010-151	010-151-16	010-120-34	
3.0L DFI	OG386496		V6	010-207-05	010-282	010-282-01		010-282-02	010-259	010-151	010-151-16	010-120-34	

PRECISION
Arizona • 1-800-977-1414
480-966-1550 • fax 480-966-1565
16441 N. 91St. Suite 105 Scottsdale, AZ 85260
Florida • 1-866-417-4072
941-238-0960 • fax 941-238-0965
1899 60th Place East, Bradenton, FL 34203
e-mail: info@wsmparts.com • www.wsmparts.com
VISA MasterCard AMERICAN EXPRESS DISCOVER NOVUS

Gasket Kits

All Gasket Kits Include Crankshaft Seals

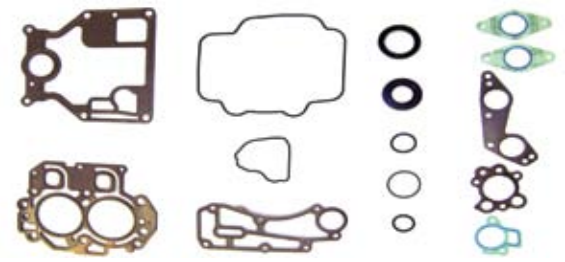

4-STROKE GASKET KIT- AVAILIBLE AS KIT ONLY

Kit No. 500-315

O.E. No. 27-835427A00

15 hp 1998-2006

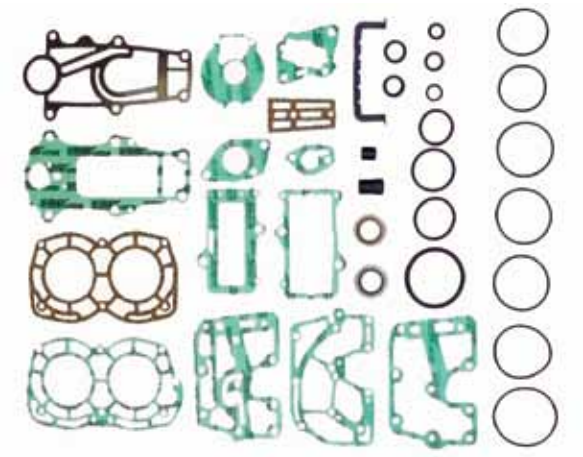

POWER HEAD GASKET KIT - AVAILIBLE AS KIT ONLY

Kit No. 500-198

O.E. No. 27-41499A87

18-25 hp 1983-Up

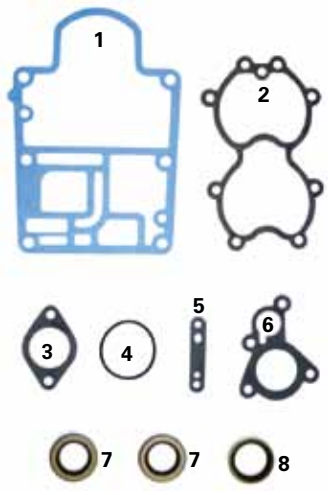

POWER HEAD GASKET KIT

Kit No. 500-199 O.E. No. 27-822420A94

30-40 hp 2 Cyl 1991-Up

INDIVIDUAL GASKETS/SEALS

Item #	Description	O.E. No.	Qty.	Part No.
1	Base Gasket	27-828553	1	510-28
2	Intake Gasket	27-821370	1	516-14
3	Carb Gasket	27-81446-1	1	516-17
4	End Cap O-Ring	25-90011	1	526-13
5	Fuel Pump Gasket	27-98769	1	540-10
6	Thermostat Gasket	27-812867-2	1	540-26-01
7	End Cap Seal	26-41953	2	550-31
8	Upper Seal	26-817397	1	550-32

New York • 1-800-222-3375
631-244-8060 • fax 631-244-0556
61 Floyd Run, Bohemia, NY 11716
Puerto Rico
787-832-2499 • fax 787-832-2939
234 Balboa St., Mayaquez, Puerto Rico 00681-2605
e-mail: info@wsmparts.com • www.wsmparts.com

Gasket Kits

All Gasket Kits Include Crankshaft Seals

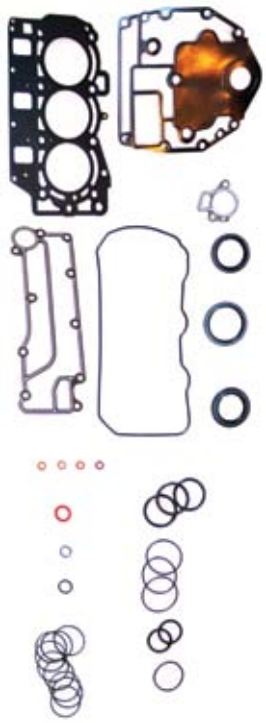

POWER HEAD GASKET KIT - AVAILIBLE AS KIT ONLY

Kit No. 500-320 O.E. No. 27-859352A02
30hp 2002-2005, 40hp 2002-2007 4 Strokes

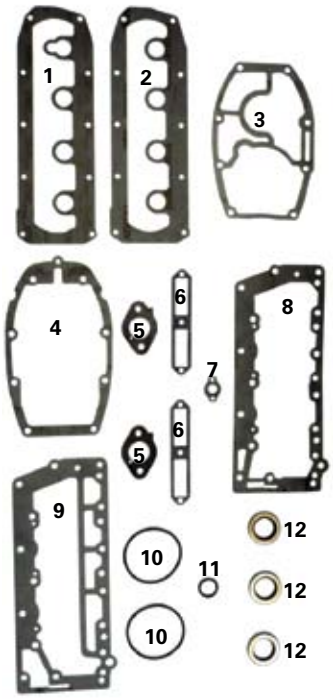

POWER HEAD GASKET KIT

Kit No. 500-200 O.E. No. 27-72486A32
40-50 hp 4 Cyl

INDIVIDUAL GASKETS/SEALS

Item #	Description	O.E. No.	Qty.	Part No.
1	Head Gasket	27-43777-2	1	505-30
2	Head Gasket (late)	27-85487	1	505-31
3	Base Gasket	27-79650-1	1	510-20
4	Adaptor Plate Gasket	27-38501-1	1	510-21
5	Carb Gasket	27-75791-1	2	516-10
6	Transfer Port Gasket	27-27936-1	2	516-11
7	Water Tube Gasket	27-79797-1	1	516-12
8	Exhaust Gasket	27-85491-3	1	521-10
9	Exhaust Gasket	27-85491-3	1	521-11
10	O-Ring	25-20081	2	526-10
11	O-Ring	25-35126	1	526-15
12	Seal	26-41953	3	550-31

PRECISION
Arizona • 1-800-977-1414
480-966-1550 • fax 480-966-1565
16441 N. 91St. Suite 105 Scottsdale, AZ 85260
Florida • 1-866-417-4072
941-238-0960 • fax 941-238-0965
1899 60th Place East, Bradenton, FL 34203
e-mail: info@wsmparts.com • www.wsmparts.com

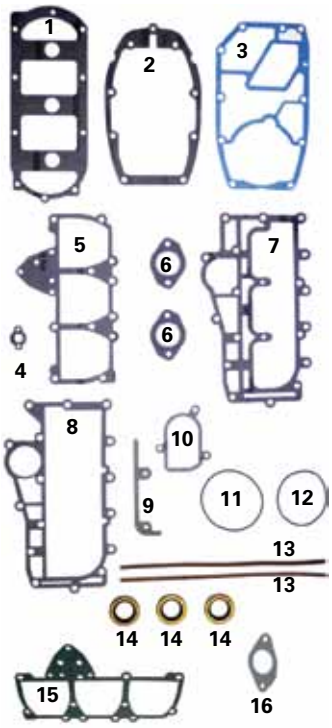

POWER HEAD GASKET KIT

Kit No. 500-202

O.E. No. 27-88449A32, 27-43779A87

50 & 60 hp 84-88 6428681 thru OD000749

65 hp 72-77 3293184-4571651, 70 hp 77-83 4571652-6428600

INDIVIDUAL GASKETS/SEALS

Item #	Description	O.E. No.	Qty.	Part No.
1	Head Gasket	27-43779-2	1	505-25
2	Adaptor Plate	27-38501-1	1	510-21
3	Base Gasket	27-88451	1	510-25
4	Water Housing Tube Seal	27-79797	1	516-12
5	Transfer Port	27-76862-1	1	516-15
6	Carb. Gasket	27-73377-1	2	516-16
7	Exhaust Gasket	27-69525-2	1	521-14
8	Exhaust Gasket	27-69524-2	1	521-15
9	Baffle Plate	27-70335-1	1	521-16
10	Exhaust Tube	27-60280-1	1	521-20
11	Upper End Cap O-Ring	25-64966	1	526-11
12	Lower End Cap O-Ring	25-32546	1	526-12
13	Crank Case	27-60286	2	540-25
14	Upper/Lower End Cap Seals	26-41953	3	550-31
15	Transfer Passage Cover Gasket		1	18-0932
16	Carb Gasket		2	18-2804

POWER HEAD GASKET KIT

Kit No. 500-204

O.E. No. 27-812867A97, 27-828553A97

50 hp OD000750 thru OG760300 & up, 60 hp OD000750 thru OG760300 & up

55/60 hp Bigfoot & 40-45 hp, 3 Cyl, 2.992 bore

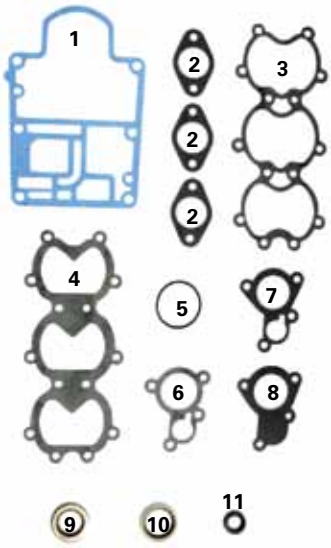

INDIVIDUAL GASKETS/SEALS

Item #	Description	O.E. No.	Qty.	Part No.
1	Base Gasket	27-828553	1	510-28
2	Carb. Gasket	27-814446-1	3	516-17
3	Reed Block Gasket	27-812868	1	516-18
4	Manifold Gasket	27-812869	1	516-19
5	Lower End Cap O-Ring	25-90011	1	526-13
6	Thermostat Gasket	29-812-867-1	1	540-26
7	Thermostat Gasket	27-812867-2	1	540-26-01
8	Thermostat Gasket	27-827284	1	540-26-02
9	Upper/Lower End Cap Oil Seals	26-41953	1	550-31
10	Upper Seal	26-817397	1	550-32
11	Lower Seal	26-66301	1	550-33

New York • 1-800-222-3375
631-244-8060 • fax 631-244-0556
61 Floyd Run, Bohemia, NY 11716
Puerto Rico
787-832-2499 • fax 787-832-2939
234 Balboa St., Mayaquez, Puerto Rico 00681-2605
e-mail: info@wsmparts.com • www.wsmparts.com

Gasket Kits

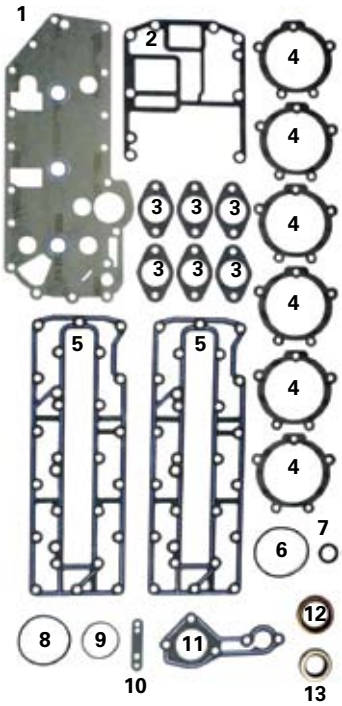

POWER HEAD GASKET KIT

Kit No. 500-206

O.E. No. 27-43004A99

70-90 hp L3

INDIVIDUAL GASKETS/SEALS

Item #	Description	O.E. No.	Qty.	Part No.
1	Head Cover Gasket	27-43005-7	1	**505-27**
2	Base Gasket	27-43007-5	1	**510-29**
3	Carb Gasket	27-81446-1	6	**516-17**
4	Reed Block Gasket	27-13937-6	6	**516-20**
5	Exhaust Gasket	27-43004-7	2	**521-21**
6	Lower End Cap O-Ring	25-89224	1	**526-14**
7	Lower Crank O-Ring	25-35126	1	**526-15**
8	Upper Crank O-Ring	25-54029	1	**526-18**
9	3.0 Litre O Ring	25-826683	1	**526-29**
10	Fuel Pump Gasket	27-98769	1	**540-10**
11	Thermostat Gasket	27-43006-8	1	**540-27**
12	Upper Crank Oil Seal	26-43993	1	**550-05**
13	Lower End Cap Oil Seal	26-41953	1	**550-31**

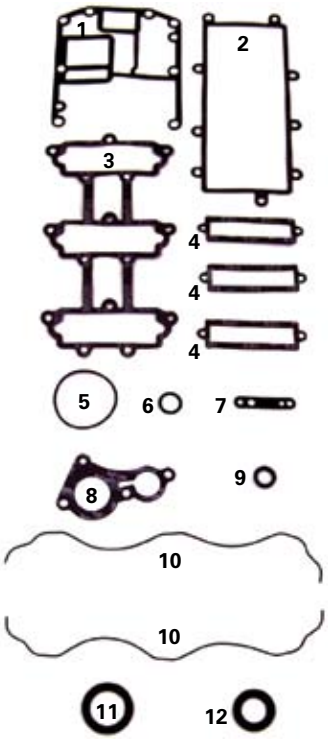

POWER HEAD GASKET KIT

Kit No. 500-207

O.E. No. 27-879855A04

1.5L DFI 3 Cyl.

INDIVIDUAL GASKETS/SEALS

Item #	Description	O.E. No.	Qty.	Part No.
1	Base Gasket	27-43007-3	1	**510-29**
2	Air Box Gasket	27-879843	1	**516-50**
3	Intake Manifold Gasket	27-879840	1	**516-51**
4	Reed Gasket	27-880122	3	**516-52**
5	End Cap O-Ring	25-89224	1	**526-14**
6	End Cap O-Ring	25-35126	1	**526-15**
7	Fuel Pump Gasket	27-98769	1	**540-10**
8	Thermostat Gasket	27-879855	1	**540-24**
9	Thermostat Gasket	27-62386001	1	**540-32**
10	Case Half O-Rings	891956	2	**540-40**
11	Upper Oil Seal	26-879635	1	**550-40T**
12	Lower Oil Seal	26-41953 3	1	**550-41T**

PRECISION
Arizona • 1-800-977-1414
480-966-1550 • fax 480-966-1565
16441 N. 91St. Suite 105 Scottsdale, AZ 85260
Florida • 1-866-417-4072
941-238-0960 • fax 941-238-0965
1899 60th Place East, Bradenton, FL 34203
e-mail: info@wsmparts.com • www.wsmparts.com

Gasket Kits

BASE GASKET

511-17

O.E. No. 68V-11351-00-00, 67F-11351-00-00
75-115 hp 4 Stroke
Base Gasket Only

POWER HEAD GASKET KIT

Kit No. 500-208

O.E. No. 27-13461A99
100 hp, OB 209468 thru OD 283221
115 hp, OC 100000 thru OD 283221

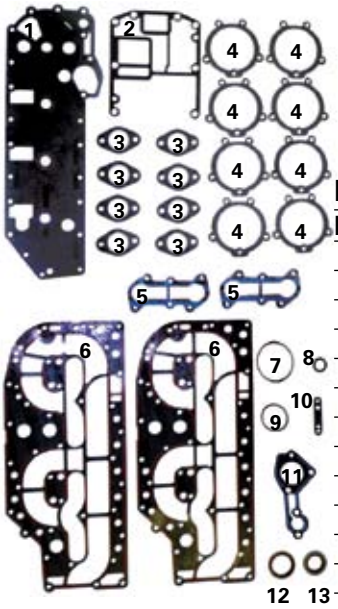

INDIVIDUAL GASKETS/SEALS

Item #	Description	O.E. No.	Qty.	Part No.
1	Head Cover Gasket	27-44328-4	1	505-35
2	Base Gasket	27-43007-3	1	510-29
3	Carb. Gasket	27-81446-1	8	516-17
4	Reed Block Gasket	27-13937-6	8	516-20
5	Intake Gasket	27-13461-2	2	516-22
6	Exhaust Gasket	27-13958-1	2	521-25
7	Lower End Cap O-Ring	25-89224	1	526-14
8	Lower Crank O-Ring	25-35126	1	526-15
9	3.0 Litre O-Ring	25-823683	1	526-29
10	Fuel Pump Gasket	27-98769	1	540-10
11	Thermostat Gasket	27-43006-8	1	540-27
12	Upper Oil Seal	26-43993	1	550-05
13	Lower End Cap Oil Seal	26-41953	1	550-31

POWER HEAD GASKET KIT

Kit No. 500-210

O.E. No. 27-13461A90, 115 hp
OD 283222 & UP, 125 hp ALL

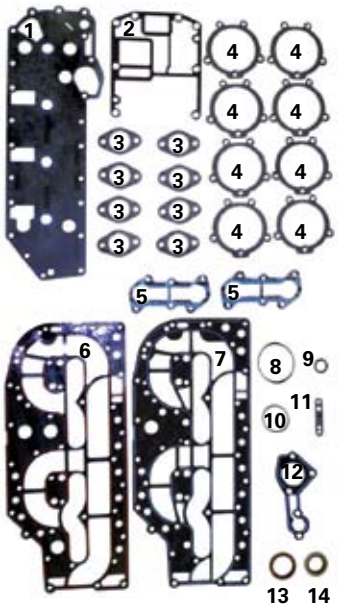

INDIVIDUAL GASKETS/SEALS

Item #	Description	O.E. No.	Qty.	Part No.
1	Head Cover Gasket	27-44328-4	1	505-35
2	Base Gasket	27-43007-5	1	510-29
3	Carb. Gasket	27-81446-1	8	516-17
4	Reed Block Gasket	27-13937-6	8	516-20
5	Intake Gasket	27-13461-2	2	516-22
6	Exhaust Gasket	27-812775-4	1	521-26
7	Exhaust Gasket	27-812775-5	1	521-27
8	Lower End Cap O-Ring	25-89224	1	526-14
9	Lower Crank O-Ring	25-35126	1	526-15
10	3.0 Litre O-Ring	25-823683	1	526-29
11	Fuel Pump Gasket	27-98769	1	540-10
12	Thermostat Gasket	27-43006-8	1	540-27
13	Upper Oil Seal	26-43993	1	550-05
14	Lower End Cap Oil Seal	26-41953	1	550-31

VISA MasterCard AMERICAN EXPRESS DISCOVER NOVUS
New York • 1-800-222-3375
631-244-8060 • fax 631-244-0556
61 Floyd Run, Bohemia, NY 11716
Puerto Rico
787-832-2499 • fax 787-832-2939
234 Balboa St., Mayaquez, Puerto Rico 00681-2605
e-mail: info@wsmparts.com • www.wsmparts.com
WSM PERFORMANCE PARTS

Gasket Kits

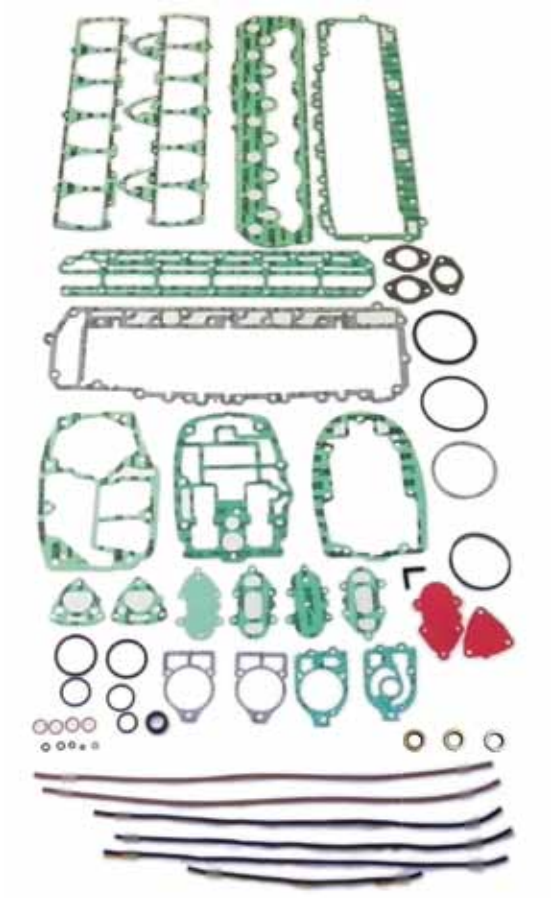

POWER HEAD GASKET KIT - AVAILIBLE AS KIT ONLY

Kit No. 500-215

O.E. No. 27-85653A79

Inline 6 Cyl.

POWER HEAD GASKET KIT

Kit No. 500-224

O.E. No. 27-79583A81

V 150 5866777 thru 6042945

V 150 XR2 5866777 thru 6042945 Early Style

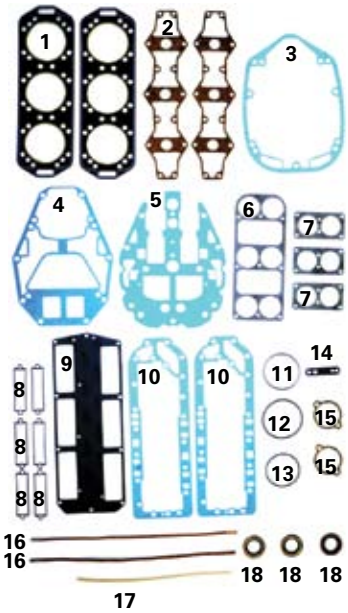

INDIVIDUAL GASKETS/SEALS

Item #	Description	O.E. No.	Qty.	Part No.
1	Head Gasket Gasket	27-79583-1	2	505-39
2	Head Cover Gasket	27-65788	2	505-40
3	Drive Housing Gasket	27-99173-4	1	510-30
4	Exhaust Plate Gasket	27-78069	1	510-31
5	Drive Housing Gasket	27-75786	1	510-34
6	Choke Plate Gasket	27-67274-1	1	516-23
7	Carb Gasket	27-90430	3	516-24
8	Reed Valve Gasket	27-65744-3	6	516-25
9	Reed Block Housing	27-93536-1	1	516-26
10	Divider Plate Gasket	27-90484-1	2	521-30
11	Upper Cap O-Ring	25-54029	1	526-18
12	Lower Cap O-Ring	25-62700	1	526-19
13	Upper Cap O-Ring, 2.99 OD	25-67206	1	526-27
14	Fuel Pump Gasket	27-98769	1	540-10
15	Relief Valve Gasket	27-88907	2	540-28-01
16	Case Half Gaskets	27-11338	2	540-30
17	Divider Hose Seal	26-814754	1	540-35
18	Upper/Lower End Cap , 2.8 OD	26-41953	3	550-31

PRECISION
Arizona • 1-800-977-1414
480-966-1550 • fax 480-966-1565
16441 N. 91St. Suite 105 Scottsdale, AZ 85260
Florida • 1-866-417-4072
941-238-0960 • fax 941-238-0965
1899 60th Place East, Bradenton, FL 34203
e-mail: info@wsmparts.com • www.wsmparts.com

Gasket Kits

POWER HEAD GASKET KIT

Kit No. 500-216

O.E. No. 27-815791A92

2.0 Liter with Horizontal Reeds

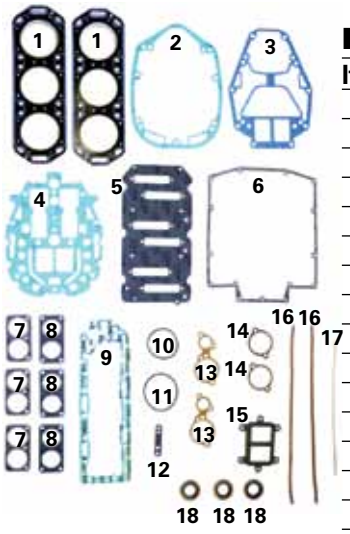

INDIVIDUAL GASKETS/SEALS

Item #	Description	O.E. No.	Qty.	Part No.
1	Head Gasket	27-18785-1	2	505-38
2	Drive Housing, Gasket	27-99173-4	1	510-30
3	Base Gasket	27-99176-4	1	510-33
4	Drive Plate Gasket	27-18307-6	1	510-36
5	Reed Block Gasket	27-14697-2	1	516-27
6	Attenuator Gasket	27-18889-1	1	516-28
7	Attenuator to Carb Gasket	27-89221-1	3	516-29
8	Carb. Mounting Gasket	27-67751	3	516-37
9	Divider Plate Gasket	27-19050	1	521-31
10	Upper Cap O-Ring	25-54029	1	526-18
11	Lower Cap O-Ring	25-62700	1	526-19
12	Fuel Pump Gasket	27-98769	1	540-10
13	Relief Valve Gasket	27-78690	2	540-28
14	Relief Valve Gasket	27-88907	2	540-28-01
15	Megaphone Gasket	27-78246	1	540-29
16	Case Half Gaskets	27-11338	2	540-30
17	Divider Hose Seal	26-814754	1	540-35
18	End Cap Oil Seals	26-41953	3	550-31

POWER HEAD GASKET KIT

Kit No. 500-226

O.E. No. 27-11338A88

2.4 Liter, 150 Magnum II OB242885 thru OC239552

150 XR4 OB242885 thru OC239552

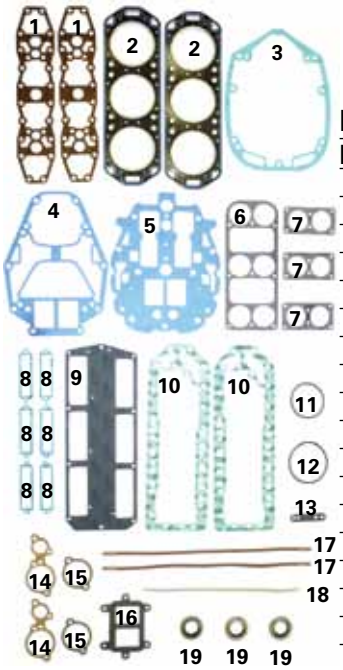

INDIVIDUAL GASKETS/SEALS

Item #	Description	O.E. No.	Qty.	Part No.
1	Head Cover	27-96278	2	505-37
2	Head Gasket	27-41246-1	2	505-42
3	Drive Housing, Gasket	27-99173-4	1	510-30
4	Base Gasket	27-99176-4	1	510-33
5	Drive Housing, Gasket	27-99177-2	1	510-35
6	Choke Plate Gasket	27-67274	1	516-23
7	Carb Gasket	27-90430-1	3	516-24
8	Reed Valve Gasket	27-65744-3	6	516-25
9	Reed Block Housing Gasket	27-93536-1	1	516-26
10	Divider Plate Gasket	27-90484	2	521-30
11	Upper Cap O-Ring	25-54029	1	526-18
12	Lower Cap O-Ring	25-62700	1	526-19
13	Fuel Pump Gasket	27-98769	1	540-10
14	Relief Valve Gasket	27-78690	2	540-28
15	Relief Valve Gasket	27-88907	2	540-28-01
16	Megaphone Gasket	27-78246	1	540-29
17	Case Half Gaskets	27-11338	2	540-30
18	Divider Hose Seal	26-814754	1	540-35
19	Upper/Lower End Cap, Oil Seals	26-41953	3	550-31

New York • 1-800-222-3375
631-244-8060 • fax 631-244-0556
61 Floyd Run, Bohemia, NY 11716
Puerto Rico
787-832-2499 • fax 787-832-2939
234 Balboa St., Mayaquez, Puerto Rico 00681-2605
e-mail: info@wsmparts.com • www.wsmparts.com

Gasket Kits

POWER HEAD GASKET KIT

Kit No. 500-234

O.E. No. 27-11338A88

2.4 Liter Carb. Motor with Vertical Reeds

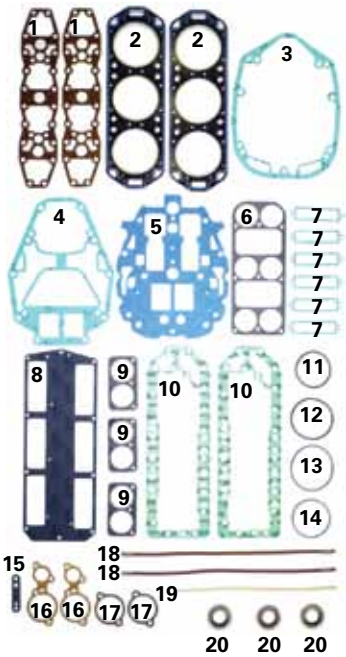

INDIVIDUAL GASKETS/SEALS

Item #	Description	O.E. No.	Qty.	Part No.
1	Head Cover Gasket	27-96278	2	505-37
2	Head Gasket	27-41246-1	2	505-42
3	Drive Housing Gasket	27-99173-4	1	510-30
4	Exhaust Plate Gasket	27-99176-4	1	510-33
5	Drive Housing Gasket	27-99177-2	1	510-35
6	Choke Plate Gasket	27-67274	1	516-23
7	Reed Valve Gasket	27-65744-3	6	516-25
8	Reed Block Housing Gasket	27-93536-1	1	516-26
9	Attenuator Gasket	27-89221-1	3	516-29
10	Divider Plate Gasket	27-90484-1	2	521-30
11	Upper Cap O-Ring 2.8 OD	25-54029	1	526-18
12	Lower Cap O-Ring	25-62700	1	526-19
13	Lower Cap O-Ring	25-67207	1	526-20
14	Upper Cap O-Ring 2.99OD	25-67206	1	526-27
15	Fuel Pump Gasket	27-98769	1	540-10
16	Relief Valve Gasket	27-78690	2	540-28
17	Relief Valve Gasket	27-88907	2	540-28-01
18	Case Half Gaskets	27-11338	2	540-30
19	Divider Hose Seal	26-814754	1	540-35
20	Upper/Lower End Cap Oil Seals	26-41953	3	550-31

HIGH PERFORAMNCE HEAD GASKETS

	2.5 Liter High Performance Head Gasket Only, 1 mm	27-814658-1	505-47
	2.5 Liter High Performance Head Gasket Only, 75 mm		505-48

POWER HEAD GASKET KIT

Kit No. 500-236

O.E. No. 27-815791A92

2.4 Liter EFI with Dowel Pins

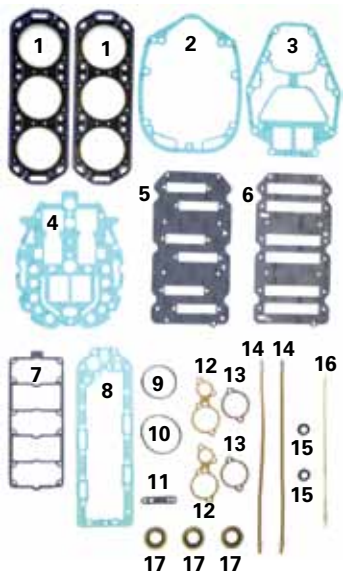

INDIVIDUAL GASKETS/SEALS

Item #	Description	O.E. No.	Qty.	Part No.
1	Head Gasket	27-18786-1	2	505-46
2	Drive Housing Gasket	27-99173-4	1	510-30
3	Base Gasket	27-99176-4	1	510-33
4	Drive Plate Gasket	27-18307-6	1	510-36
5	Reed Block Gasket	27-14697-2	1	516-27
6	Reed Block 1991 only Gasket	27-813859	1	516-34
7	Adaptor Plate Gasket	27-16737-1	1	516-32
8	Divider Plate Gasket	27-19050-3	1	521-31
9	Upper Cap O-Ring 2.8OD	25-54029	1	526-18
10	Lower Cap O-Ring	25-62700	1	526-19
11	Fuel Pump Gasket	27-98769	1	540-10
12	Relief Valve Gasket	27-78690	2	540-28
13	Relief Valve Gasket	27-88907	2	540-28-01
14	Case Half Gaskets	27-11338	2	540-30
15	Thermostat Gasket	27-62386	2	540-32
16	Divider Hose Seal	26-814754	1	540-35
17	Upper/Lower End Cap Seals	26-41953	3	550-31

PRECISION
Arizona • 1-800-977-1414
480-966-1550 • fax 480-966-1565
16441 N. 91St. Suite 105 Scottsdale, AZ 85260
Florida • 1-866-417-4072
941-238-0960 • fax 941-238-0965
1899 60th Place East, Bradenton, FL 34203
e-mail: info@wsmparts.com • www.wsmparts.com

Gasket Kits

POWER HEAD GASKET KIT

Kit No. 500-238

O.E. No. 27-89221A88

2.4 Liter Carb Motor with Horizontal Reeds

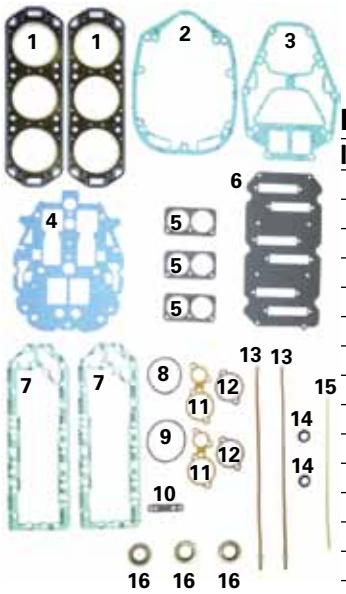

INDIVIDUAL GASKETS/SEALS

Item #	Description	O.E. No.	Qty.	Part No.
1	Head Gasket	27-41246-1	2	**505-42**
2	Drive Housing Gasket	27-99173-4	1	**510-30**
3	Base Gasket	27-99176-4	1	**510-33**
4	Drive Housing Gasket	27-99177-2	1	**510-35**
5	Attenuator Gasket	27-89221-1	3	**516-29**
6	Reed Block Gasket	27-96761-1	1	**516-33**
7	Divider Plate Gasket	27-90484-1	2	**521-30**
8	Upper Cap O-Ring 2.8 OD	25-54029	1	**526-18**
9	Lower Cap O-Ring	25-62700	1	**526-19**
10	Fuel Pump Gasket	27-98769	1	**540-10**
11	Relief Valve Gasket	27-78690	2	**540-28**
12	Relief Valve Gasket	27-88907	2	**540-28-01**
13	Case Half Gaskets	27-11338	2	**540-30**
14	Thermostat Gaskets	27-62386	2	**540-32**
15	Divider Hose Seal	26-814754	1	**540-35**
16	Upper/Lower End Cap Seals	26-41953	3	**550-31**

POWER HEAD GASKET KIT

Kit No. 500-240

O.E. No. 27-14697A87

2.4 Liter EFI

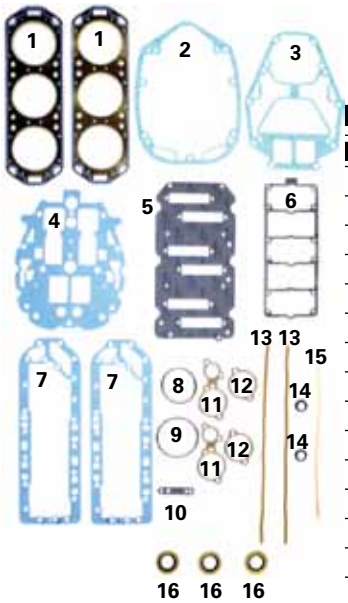

INDIVIDUAL GASKETS/SEALS

Item #	Description	O.E. No.	Qty.	Part No.
1	Head Gasket	27-41246-1	2	**505-42**
2	Drive Housing Gasket	27-99173-4	1	**510-30**
3	Base Gasket	27-99176-4	1	**510-33**
4	Drive Housing Gasket	27-99177-2	1	**510-35**
5	Reed Block Gasket	27-14697-2	1	**516-27**
6	Adaptor Plate Gasket	27-16737-1	1	**516-32**
7	Divider Plate Gasket	27-90484-1	2	**521-30**
8	Upper Cap O-Ring 2.8OD	25-54029	1	**526-18**
9	Lower Cap O-Ring	25-62700	1	**526-19**
10	Fuel Pump Gasket	27-98769	1	**540-10**
11	Relief Valve Gasket	27-78690	2	**540-28**
12	Relief Valve Gasket	27-88907	2	**540-28-01**
13	Case Half Gaskets	27-11338	2	**540-30**
14	Thermostat Gaskets	27-62386	2	**540-32**
15	Divider Hose Seal	26-814754	1	**540-35**
16	Upper/Lower End Cap Oil Seals	26-41953	3	**550-31**

New York • 1-800-222-3375
631-244-8060 • fax 631-244-0556
61 Floyd Run, Bohemia, NY 11716
Puerto Rico
787-832-2499 • fax 787-832-2939
234 Balboa St., Mayaquez, Puerto Rico 00681-2605
e-mail: info@wsmparts.com • www.wsmparts.com

Gasket Kits

POWER HEAD GASKET KIT

Kit No. 500-219

O.E. No. 27-815791-A92

2.5 Litre Carb Motor With Head Gaskets

INDIVIDUAL GASKETS/SEALS

Item #	Description	O.E. No.	Qty.	Part No.
1	Head Gasket	27-822844-1	2	**505-45**
2	Drive Housing Gasket	27-99173-4	1	**510-30**
3	Base Gasket	27-99176-4	1	**510-33**
4	Drive Plate Gasket	27-18307-6	1	**510-36**
5	Reed Block Gasket	27-14697-2	1	**516-27**
6	Attenuator Gasket	27-89221-1	3	**516-29**
7	Carb. Gasket	27-828292	3	**516-36**
8	EX Divider Plate Gasket	27-19050-6	1	**521-31**
9	Upper Cap O-Ring	25-54029	1	**526-18**
10	Lower End Cap O-Ring	25-62700	1	**526-19**
11	Fuel Pump Gasket	27-98769	1	**540-10**
12	Poppet Relief Valve Gasket	27-78690	2	**540-28**
13	Poppet Relief Valve Gasket	27-88907	2	**540-28-01**
14	Case Half Gaskets	27-11338	2	**540-30**
15	Thermostat Gasket	27-62386	2	**540-32**
16	Divider Hose Seal	26-814754	1	**540-35**
17	Upper/Lower End Cap Crank Seal	26-41953	3	**550-31**

POWER HEAD GASKET KIT

Kit No. 500-220

O.E. No. 27-815791A00

2.5 Liter Carb Motors With 0-Ring Heads

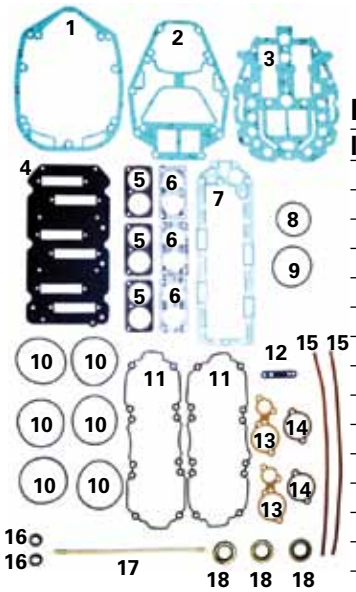

INDIVIDUAL GASKETS/SEALS

Item #	Description	O.E. No.	Qty.	Part No.
1	Drive Housing	27-99173-4	1	**510-30**
2	Base Gasket	27-99176-4	1	**510-33**
3	Drive Plate Gasket	27-18307-6	1	**510-36**
4	Reed Block Gasket	27-14697-2	1	**516-27**
5	Attenuator Gasket	27-89221-1	3	**516-29**
6	Carb. Gasket	27-828292	3	**516-36**
7	Divider Plate	27-19050-6	1	**521-31**
8	Upper End Cap O-Ring	25-54029	1	**526-18**
9	Lower End Cap O-Ring	25-62700	1	**526-19**
10	Head Inner O-Ring	859772-1	6	**526-25**
11	Head Outer O-Ring	858452-1	2	**526-26**
12	Fuel Pump Gasket	27-98769	1	**540-10**
13	Relief Valve Gasket	27-78690	2	**540-28**
14	Relief Valve Gasket	27-88907	2	**540-28-01**
15	Case Half Gaskets	27-11338	2	**540-30**
16	Thermostat Gasket	27-62386	2	**540-32**
17	Divider Hose Seal	26-814754	1	**540-35**
18	End Cap Oil Seals	26-41953	3	**550-31**

PRECISION
Arizona • 1-800-977-1414
480-966-1550 • fax 480-966-1565
16441 N. 91St. Suite 105 Scottsdale, AZ 85260
Florida • 1-866-417-4072
941-238-0960 • fax 941-238-0965
1899 60th Place East, Bradenton, FL 34203
e-mail: info@wsmparts.com • www.wsmparts.com

Gasket Kits

POWER HEAD GASKET KIT

Kit No. 500-228

O.E. No. 27-815791A92

2.5 Liter EFI with Head gaskets

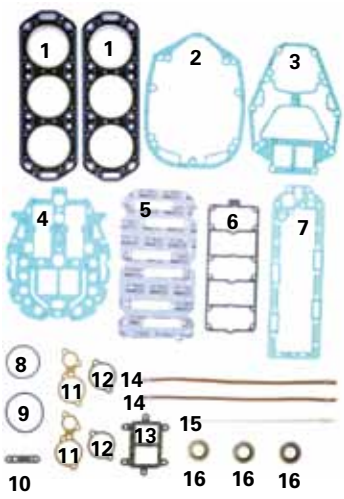

INDIVIDUAL GASKETS/SEALS

Item #	Description	O.E. No.	Qty.	Part No.
1	Head Gasket	27-822844-1	2	**505-45**
2	Drive Housing Gasket	27-99173-4	1	**510-30**
3	Base Gasket	27-99176-4	1	**510-33**
4	Drive Plate Gasket	27-18307-6	1	**510-36**
5	Reed Block Gasket	27-14697-2	1	**516-27**
6	Adaptor Plate Gasket	27-16737-1	1	**516-32**
7	Divider Plate Gasket	27-19050-6	1	**521-31**
8	Upper Cap O-Ring 2.8 OD	25-54029	1	**526-18**
9	Lower Cap O-Ring	25-62700	1	**526-19**
10	Fuel Pump Gasket	27-98769	1	**540-10**
11	Relief Valve Gasket	27-78690	2	**540-28**
12	Relief Valve Gasket	27-88907	2	**540-28-01**
13	Megaphone Gasket	27-78246	1	**540-29**
14	Case Half Gaskets	27-11338	2	**540-30**
15	Divider Hose Seal	26-814754	1	**540-35**
16	Upper/Lower End Cap Oil Seals	26-41953	3	**550-31**

POWER HEAD GASKET KIT

Kit No. 500-230

O.E. No. 27-815791A00

2.5 Liter EFI with Head O-Rings

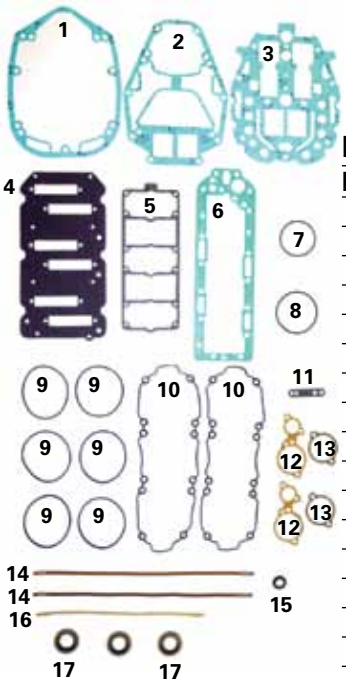

INDIVIDUAL GASKETS/SEALS

Item #	Description	O.E. No.	Qty.	Part No.
1	Drive Housing	27-99173-4	1	**510-30**
2	Base Gasket	27-99176-4	1	**510-33**
3	Drive Plate Gasket	27-18307-6	1	**510-36**
4	Reed Block Gasket	27-14697-2	1	**516-27**
5	Intake Gasket	27-16737-1	1	**516-32**
6	Divider Plate Gasket	27-19050-6	1	**521-31**
7	Upper Cap O-Ring 2.8 OD	25-54029	1	**526-18**
8	Lower Cap O-Ring	25-62700	1	**526-19**
9	Head Inner O-Ring	859772-1	6	**526-25**
10	Head Outer O-Ring	858452-1	2	**526-26**
11	Fuel Pump Gasket	27-98769	1	**540-10**
12	Relief Valve Gasket	27-78690	2	**540-28**
13	Relief Valve Gasket	27-88907	2	**540-28-01**
14	Case Half Gaskets	27-11338	2	**540-30**
15	Thermostat Gasket	27-62386	2	**540-32**
16	Divider Hose Seal	26-814754	1	**540-35**
17	Upper/Lower End Cap	26-41953	3	**550-31**

New York • 1-800-222-3375
631-244-8060 • fax 631-244-0556
61 Floyd Run, Bohemia, NY 11716
Puerto Rico
787-832-2499 • fax 787-832-2939
234 Balboa St., Mayaquez, Puerto Rico 00681-2605
e-mail: info@wsmparts.com • www.wsmparts.com

Gasket Kits

POWER HEAD GASKET KIT

Kit No. 500-229

O.E. No. 27-814658A3

V-6 2.5 L Hi Performance 14 Petal

EFI / EFI Off-Shore

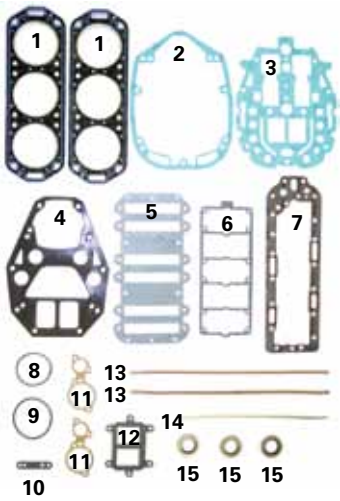

INDIVIDUAL GASKETS/SEALS

Item #	Description	O.E. No.	Qty.	Part No.
1	Head Gasket 1 mm	27-814658-1	2	**505-47**
2	Drive Housing Gasket	27-99173-4	1	**510-30**
3	Drive Plate Gasket	27-18307-6	1	**510-36**
4	Base Gasket	27-823142-2	1	**510-38**
5	Reed Block Gasket	27-12775-4	1	**516-27-01**
6	Adaptor Plate Gasket	27-16737-1	1	**516-32**
7	Divider Plate Gasket	27-847525-1	1	**521-33**
8	Upper Cap O-Ring 2.8 OD	25-54029	1	**526-18**
9	Lower Cap O-Ring	25-62700	1	**526-19**
10	Fuel Pump Gasket	27-98769	1	**540-10**
11	Relief Valve Gasket	27-78690	2	**540-28**
12	Megaphone Gasket	27-78246	1	**540-29**
13	Case Half Gaskets	27-11338	2	**540-30**
14	Divider Hose Seal	26-814754	1	**540-35**
15	Upper/Lower End Cap Seal	26-41953	3	**550-31**
16	Horn Intake Gasket	99316	1	**510-46**

HIGH PERFORAMNCE HEAD GASKETS

	2.5 Liter High Performance Head Gasket Only, 1 mm	27-814658-1	**505-47**
	2.5 Liter High Performance Head Gasket Only, 75 mm		**505-48**

POWER HEAD GASKET KIT - AVAILIBLE AS KIT ONLY

Kit No. 500-229-01

O.E. No. 27-813859A95

V-6 2.5 Liter EFI Pro Max / Super Mag

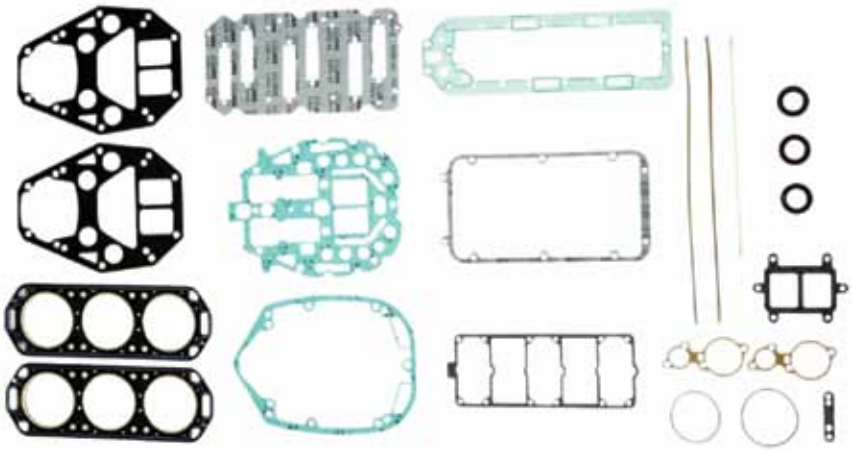

PRECISION
Arizona • 1-800-977-1414
480-966-1550 • fax 480-966-1565
16441 N. 91St. Suite 105 Scottsdale, AZ 85260
Florida • 1-866-417-4072
941-238-0960 • fax 941-238-0965
1899 60th Place East, Bradenton, FL 34203
e-mail: info@wsmparts.com • www.wsmparts.com

Gasket Kits

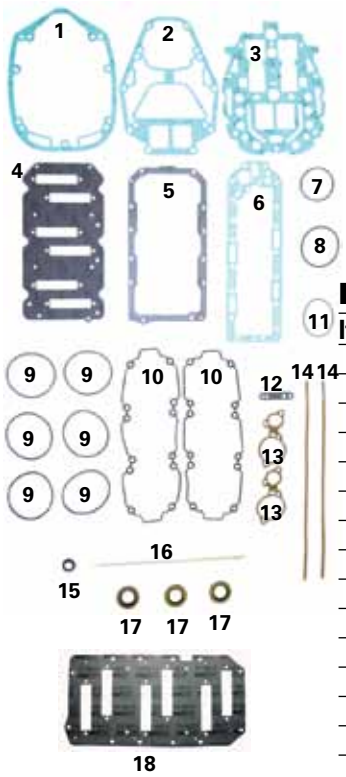

Kit No. 500-222
O.E. No. 27-814754A00
135 DFI 2.5L OG960500 & up, 150 DFI 2.5L OG960500 & up,
175 DFI 2.5L OT178500 & up, V 150 EFI 2.5L OT409000 & up,
V 175 EFI 2.5L OT409000 & up

INDIVIDUAL GASKETS/SEALS

Item #	Description	O.E. No.	Qty.	Part No.
1	Drive Housing Gasket	27-99173-4	1	**510-30**
2	Base Gasket	27-99176-4	1	**510-33**
3	Drive Plate Gasket	27-18307-6	1	**510-36**
4	DFI Reed Block Gasket	27-14697-3	1	**516-35**
5	Plate Gasket	27-850058-1	1	**516-31**
6	Divider Plate Gasket	27-19050-6	1	**521-32**
7	Upper End Cap O-Ring	25-54029	1	**526-18**
8	Lower End Cap O-Ring	25-62700	1	**526-19**
9	Head Inner O-Ring	859772-1	6	**526-25**
10	Head Outer O-Ring	858452-1	2	**526-26**
11	Throttle Body O-Ring	25-855423	1	**526-28**
12	Fuel Pump Gasket	27-98769	1	**540-10**
13	Relief Valve Gasket	27-78690	2	**540-28**
14	Case Half Gaskets	27-11338	2	**540-30**
15	Thermostat Gasket	27-62386	2	**540-32**
16	Divider Hose Seal	26-814754	1	**540-35**
17	End Cap Oil Seals	26-41953	3	**550-31**
18	EFI Reed Block Gasket	27-14697	1	**516-35-01**

POWER HEAD GASKET KIT

Kit No. 500-218
O.E. No. 27-814754A98
2.5 Liter DFI With Head Gaskets

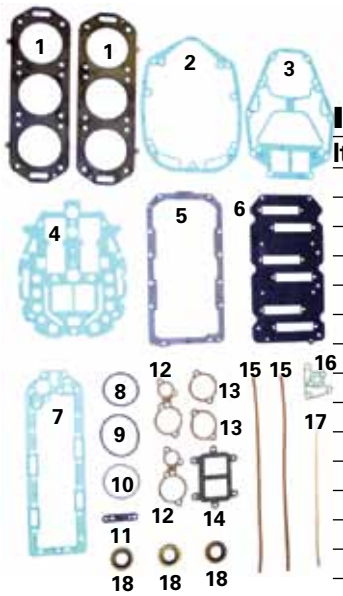

INDIVIDUAL GASKETS/SEALS

Item #	Description	O.E. No.	Qty.	Part No.
1	Head Gasket	27-852520-3	2	**505-41**
2	Drive Housing Gasket	27-99173-4	1	**510-30**
3	Base Gasket	27-99176-3/4	1	**510-33**
4	Drive Plate Gasket	27-18307-6	1	**510-36**
5	Reed Plate Gasket	27-850058-1	1	**516-31**
6	Reed Plate Gasket	27-14697-3	1	**516-35**
7	Divider Plate Gasket	27-19050-3	1	**521-31**
8	Upper End Cap O-Ring	25-54029	1	**526-18**
9	Lower End Cap O-Ring	25-62700	1	**526-19**
10	Throttle Body O-Ring	25-855423	1	**526-28**
11	Fuel Pump Gasket	27-98769	1	**540-10**
12	Relief Valve Gasket	27-78690	2	**540-28**
13	Relief Valve Gasket	27-88907	2	**540-28-01**
14	Megaphone Gasket	27-78246-1	1	**540-29**
15	Case Half Gaskets	27-11338	2	**540-30**
16	Oil Pump Gasket	27-856542-1	1	**540-31**
17	Divider Hose Seal	26-814754	1	**540-35**
18	End Cap Oil Seals	26-41953	3	**550-31**

New York • 1-800-222-3375
631-244-8060 • fax 631-244-0556
61 Floyd Run, Bohemia, NY 11716
Puerto Rico
787-832-2499 • fax 787-832-2939
234 Balboa St., Mayaquez, Puerto Rico 00681-2605
e-mail: info@wsmparts.com • www.wsmparts.com

Gasket Kits

POWER HEAD GASKET KIT

Kit No. 500-221

O.E. No. 27-850396A1

Fits: Sport Jet 175 hp with Head Gaskets

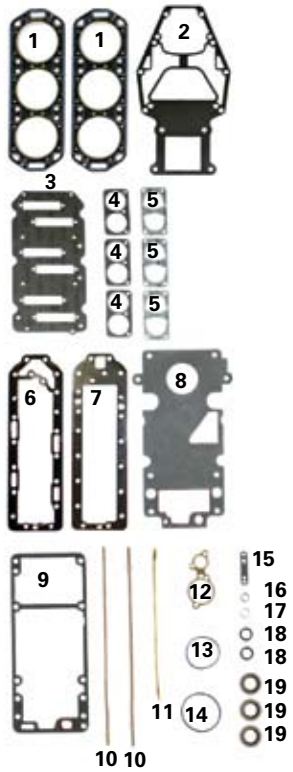

INDIVIDUAL GASKETS/SEALS

Item #	Description	O.E. No.	Qty.	Part No.
1	Head Gasket	27-822844-1	2	505-45
2	Adaptor to Block Gasket	27-835367	1	510-40
3	Reed Block Gasket	27-14697-2	1	516-27
4	Attenuator To Carburetor Gasket	27-89221-1	3	516-29
5	Carburetor Gasket	27-828292	3	516-36
6	Exhaust Manifold Gasket	27-19050-7	1	521-34
7	Exhaust Cover Gasket	27-855874001	1	521-22
8	Drive Shaft Housing Gasket	27-835367	1	510-41
9	Drive Shaft Housing Gasket	27-830244	1	510-42
10	Cork Gasket	27-11338	2	540-30
11	Divider Hose Seal	26-814754	1	540-35
12	Relief Valve Gasket	27-78690	1	540-28
13	Upper End O-Ring	25-54029	1	526-18
14	Lower Cap O-Ring	25-62700	1	526-19
15	Fuel Pump Gasket	27-98769	1	540-10
16	Oil Pump O-Ring	25-48462	1	526-22
17	Oil Pump O-Ring	25-11379	1	526-21
18	End Cap O-Ring	25-35126	2	526-15
19	End Cap Seal	26-41953-1	3	550-31

POWER HEAD GASKET KIT

Kit No. 500-221-01

O.E. No. 27-804852A1

Fits: Sport Jet 175 hp with O-Ring Heads

INDIVIDUAL GASKETS/SEALS

Item #	Description	O.E. No.	Qty.	Part No.
1	Inner Cyl.Head Oring	859772-1	6	526-25
2	Outer Cyl. Head Oring	858452-1	2	526-26
3	Adaptor to Block Gasket	27-830242001	1	510-40
4	Reed Block Gasket	27-14697-2	1	516-27
5	Attenuator to Carburetor Gasket	27-89221-1	3	516-29
6	Carburetor Gasket	27-828292	3	516-36
7	Exhaust Manifold Gasket	27-19050 7	1	521-34
8	Exhaust Cover Gasket	27-855874001	1	521-22
9	Drive Shaft Housing Gasket	27-835367	1	510-41
10	Drive Shaft Housing Gasket	27-830244	1	510-42
11	Cork Gasket	27-11338	2	540-30
12	Divider Hose Seal	26-814754	1	540-35
13	Relief Valve Gasket	27-78690	1	540-28
14	Upper End O-Ring	25-54029	1	526-18
15	Lower Cap O-Ring	25-62700	1	526-19
16	Fuel Pump Gasket	27-98769	1	540-10
17	O-Ring	25-48462	1	526-22
18	Oil Pump O-Ring	25-11379	1	526-21
19	End Cap O-Ring	25-35126	2	526-15
20	End Cap Seal	26-41953 1	3	550-31

PRECISION
Arizona • 1-800-977-1414
480-966-1550 • fax 480-966-1565
16441 N. 91St. Suite 105 Scottsdale, AZ 85260
Florida • 1-866-417-4072
941-238-0960 • fax 941-238-0965
1899 60th Place East, Bradenton, FL 34203
e-mail: info@wsmparts.com • www.wsmparts.com

Gasket Kits

POWER HEAD GASKET KIT

Kit No. 500-221-02

O.E. No. 27-883298A1

Fits: Sport Jet V6 DFI 200 hp

INDIVIDUAL GASKETS/SEALS

Item #	Description	O.E. No.	Qty.	Part No.
1	Inner Cyl.Head O-Ring	859772-1	6	526-25
2	Outer Cyl. Head O-Ring	858452-1	2	526-26
3	DFI Plate Gasket	27-850058-1	1	516-31
4	Reed Block Gasket	27-14697-3	1	516-35
5	Engine Adaptor Gasket	27-859398	1	510-43
6	Divider Plate Gasket	27-19050-6	1	521-32
7	Divider Hose Seal	26-814754	1	540-35
8	Base Gasket	27-843142 2	1	510-38
9	Expansion Chamber To Adaptor Plate Gasket	27-880738	1	510-39
10	Relief Valve Gasket	27-78690	1	540-28
11	Fuel Pump Gasket	27-98769	1	540-10
12	End Cap O-Ring	25-35126	2	526-15
13	Upper End O-Ring	25-54029	1	526-18
14	Lower Cap O-Ring	25-62700	1	526-19
15	Drive Housing Gasket	27-859452	1	510-44
16	Temp. Sensor O-Ring	25-888814	1	526-07
17	O-Ring	25-45711	1	008-415
18	Temp. Sensor O-Ring	25-62702 1	3	526-08
19	End Cap Seal	26-41953 1	3	550-31

POWER HEAD GASKET KIT

Kit No. 500-221-03

O.E. No. 27-804985A1

Fits: Sport Jet 210 hp Carb Models

INDIVIDUAL GASKETS/SEALS

Item #	Description	O.E. No.	Qty.	Part No.
1	Inner Head O-Ring	859772-1	6	526-25
2	Outer Head O-Ring	858452-1	2	526-26
3	Attenuator To Carburetor Gasket	27-89221-1	3	516-29
4	Carburetor Gasket	27-82892	3	516-36
5	Reed Block Gasket	27-14697-2	1	516-27
6	Engine Adaptor Gasket	27-859398	1	510-43
7	Divider Plate Gasket	27-19050-6	1	521-32
8	Divider Hose Seal	26-814754	1	540-35
9	Cork Gasket	27-11338	2	540-30
10	High Performance Base Gasket	27-823142 2	1	510-38
11	Expansion Chamber To Adaptor Plate Gasket	27-880738	1	510-39
12	Relief Valve Gasket	27-78690	1	540-28
13	Fuel Pump Gasket	27-98769	1	540-10
14	Upper End O-Ring	25-54029	1	526-18
15	Lower Cap O-Ring	25-62700	1	526-19
16	Drive Housing Gasket	27-859452	1	510-44
17	End Cap O-Ring	25-35126	2	526-15
18	Oil Pump O-Ring	25-11379	1	526-21
19	Oil Pump O-Ring	25-48462	1	526-22
20	End Cap Seal	26-41953 1	3	550-31

VISA MasterCard AMERICAN EXPRESS DISCOVER NOVUS
New York • 1-800-222-3375
631-244-8060 • fax 631-244-0556
61 Floyd Run, Bohemia, NY 11716
Puerto Rico
787-832-2499 • fax 787-832-2939
234 Balboa St., Mayaquez, Puerto Rico 00681-2605
e-mail: info@wsmparts.com • www.wsmparts.com
WSM PERFORMANCE PARTS

Gasket Kits

POWER HEAD GASKET KIT

Kit No. 500-221-04

O.E. No. 27-885214A1

Fits: Sport Jet 240 EFI

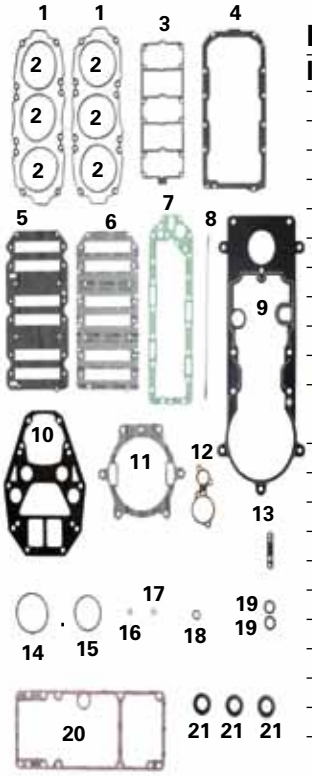

INDIVIDUAL GASKETS/SEALS

Item #	Description	O.E. No.	Qty.	Part No.
1	Outer Cyl Head O-Ring	858452-1	2	**526-26**
2	Inner Cyl Head O-Ring	859772-1	6	**526-25**
3	Adapter Plate Gasket	27-16737 1	1	**516-32**
4	DFI Plate Gasket	27-850058-1	1	**516-31**
5	Reed Block Gasket	27-813859	1	**516-34**
6	Adapter to Block Gasket	27-840484	1	**516-44**
7	Divider Plate Gasket	27-19050-6	1	**521-32**
8	Divider Hose Seal	26-814754	1	**540-35**
9	Engine Adapter Gasket	27-859398	1	**510-43**
10	Base Gasket	27-823142 2	1	**510-38**
11	Expansion Chamber to Adapter Plate Gasket	27-880738	1	**510-39**
12	Relief Valve Gasket	27-78690	1	**540-28**
13	Fuel Pump Gasket	27-98769	1	**540-10**
14	Lower Cap O-Ring	25-62700	1	**526-19**
15	Upper End O-Ring	25-54029	1	**526-18**
16	Temp Sensor O-Ring	25-62702 1	1	**526-08**
17	Temp Sensor O-Ring	25-888814	1	**526-07**
18	Temp Sensor O-Ring	25-45711	1	**008-415**
19	End Cap O-Ring	25-35126	2	**526-15**
20	Drive Housing Gasket	27-859452	1	**510-44**
21	End Cap Seals	26-41953 1	3	**550-31**

POWER HEAD GASKET KIT

Kit No. 500-242

O.E. No. 27-814195A93

Fits: 3.0 Liter Carb / EFI

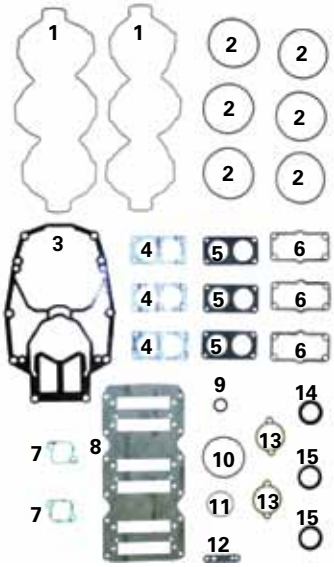

INDIVIDUAL GASKETS/SEALS

Item #	Description	O.E. No.	Qty.	Part No.
1	Head Outer O-Ring	818574	2	**505-50**
2	Head Inner O-Ring	25-818573	6	**505-51**
3	Exhaust Plate Gasket	27-813932-2	1	**510-37-01**
4	Carb. Gasket	27-828292	3	**516-36**
5	Carb. Gasket	27-67751-1	3	**516-37**
6	Adaptor Plate. Gasket	27-825815	3	**516-38**
7	Thermostat Gasket	27-850318	2	**516-39**
8	Reed Block Gasket	27-814195-1	1	**516-40**
9	Lower Crank O-Ring	25-35126	1	**526-15**
10	Lower Cap O-Ring	25-62700	1	**526-19**
11	Upper Crank O-Ring	25-823683	1	**526-29**
12	Fuel Pump Gasket	27-98769	1	**540-10**
13	Relief Valve Gasket	27-88907	2	**540-28-01**
14	Upper Crank Oil Seal	26-815449	1	**550-37T**
15	Lower Crank Oil Seal	26-830898-1	2	**550-38T**

PRECISION
Arizona • 1-800-977-1414
480-966-1550 • fax 480-966-1565
16441 N. 91St. Suite 105 Scottsdale, AZ 85260
Florida • 1-866-417-4072
941-238-0960 • fax 941-238-0965
1899 60th Place East, Bradenton, FL 34203
e-mail: info@wsmparts.com • www.wsmparts.com

Gasket Kits

POWER HEAD GASKET KIT

Kit No. 500-243

O.E. No. 27-814195A97

Fits: Optimax & DFi's 200 hp 3.0 Liter

INDIVIDUAL GASKETS/SEALS

Item #	Description	O.E. No.	Qty.	Part No.
1	Head Outer O-Ring	818574	2	505-50
2	Head Inner O-Ring	25-818573	6	505-51
3	Base Gasket 3.0 Liter	27-832933-5	1	510-37-01
4	Adaptor Plate. Gasket	27-825815	3	516-38
5	Thermostat Gasket	27-850318	2	516-39
6	Reed Block Gasket	27-814195-1	1	516-40
7	Reed Block Gasket	27-834828	1	516-41
8	Lower Crank O-Ring	25-35126	1	526-15
9	Lower Cap O-Ring	25-62700	1	526-19
10	Upper Crank O-Ring	25-823683	1	526-29
11	Fuel Pump Gasket	27-98769	1	540-10
12	Relief Valve Gasket	27-88907	2	540-28-01
13	Upper Crank Oil Seal	26-815449	1	550-37T
14	Lower Crank Oil Seal	26-830898-1	2	550-38T

POWER HEAD GASKET KIT

Kit No. 500-244

O.E. No. 832934A98

Fits: Optimax & DFi's 3.0 Liter

INDIVIDUAL GASKETS/SEALS

Item #	Description	O.E. No.	Qty.	Part No.
1	Head Outer O-Ring	818574	2	505-50
2	Head Inner O-Ring	25-818573	6	505-51
3	Inner Head Gasket O-Ring Yellow	25-884391	6	505-53
4	Base Gasket 3.0 Liter	27-832933-5	1	510-37-01
5	Thermostat Gasket	27-850318	2	516-39
6	Reed Block Gasket	27-804680	1	516-40-01
7	Reed Block Gasket	27-850282	1	516-42
8	Reed Block Gasket	27-850892	1	516-43
9	Lower Crank O-Ring	25-35126	1	526-15
10	Lower Cap O-Ring	25-62700	1	526-19
11	Throttle Body O Ring	25-855423	1	526-28
12	Upper Crank O-Ring	25-823683	1	526-29
13	Fuel Pump Gasket	27-98769	1	540-10
14	Relief Valve Gasket	27-88907	2	540-28-01
15	Gasket, Oil Pump	27-856542	1	540-31
16	Gasket, Oil Pump DFI	27-856452	1	540-31-01
17	Upper Crank Oil Seal	26-815449	1	550-37T
18	Lower Crank Oil Seal	26-830898-1	2	550-38T

New York • 1-800-222-3375
631-244-8060 • fax 631-244-0556
61 Floyd Run, Bohemia, NY 11716
Puerto Rico
787-832-2499 • fax 787-832-2939
234 Balboa St., Mayaquez, Puerto Rico 00681-2605
e-mail: info@wsmparts.com • www.wsmparts.com

Gasket Kits

POWER HEAD GASKET KIT

Kit No. 500-245

O.E. No. 27-832934A00

Fits: Optimax & DFi's 3.0 Liter With S/N OT599000-Up

INDIVIDUAL GASKETS/SEALS

Item #	Description	O.E. No.	Qty.	Part No.
1	Head Outer O-Ring	818574	2	505-50
2	Inner Head Gasket O-Ring Yellow	25-884391	6	505-53
3	Base Gasket 3.0 Liter	27-832933-5	1	510-37-01
4	Plate Gasket	27-804679 3	1	516-31-01
5	Thermostat Gasket	27-850318	2	516-39
6	Reed Block Gasket	27-804680	1	516-40-01
7	Upper End O-Ring	25-54029	1	526-18
8	Lower Cap O-Ring	25-62700	1	526-19
9	Throttle Body O-Ring	25-855423	1	526-28
10	Upper Crank O-Ring	25-823683	1	526-29
11	Fuel Pump Gasket	27-98769	1	540-10
12	Relief Valve Gasket	27-88907	2	540-28-01
13	Upper Crank Oil Seal	26-815449	1	550-37
14	Lower Crank Oil Seal	26-830898-1	2	550-38

POWER HEAD GASKET KIT

Kit No. 500-245-01

O.E. No. 27-841220A03

Fits: 3.0L Pro XS DFI 225-300 Hp

INDIVIDUAL GASKETS/SEALS

Item #	Description	O.E. No.	Qty	Part No.
1	Head Outer O-Ring		2	505-50
2	Inner Head Gasket O-Ring Yellow		6	505-53
3	Base Gasket 3.0L		1	510-37-02
4	Plenum Gasket		1	516-31-01
5	Thermostat Gaket		2	516-39
6	Reed Block Gasket		1	516-40-01
7	Upper End O-Ring		1	526-18
8	Lower Cap O-Ring		1	526-19
9	Throttle Bottle O-Ring		1	526-28
10	Upper Crank O-Ring		1	526-29
11	Fuel Pump Gasket		1	540-10
12	Relif Valve Gasket		2	540-28-01
13	Teflon Upper Crank Oil Seal		1	550-37T
14	Teflon Lower Crank Oil Seal		2	550-38T

PRECISION
Arizona • 1-800-977-1414
480-966-1550 • fax 480-966-1565
16441 N. 91St. Suite 105 Scottsdale, AZ 85260
Florida • 1-866-417-4072
941-238-0960 • fax 941-238-0965
1899 60th Place East, Bradenton, FL 34203
e-mail: info@wsmparts.com • www.wsmparts.com

Gasket Kits

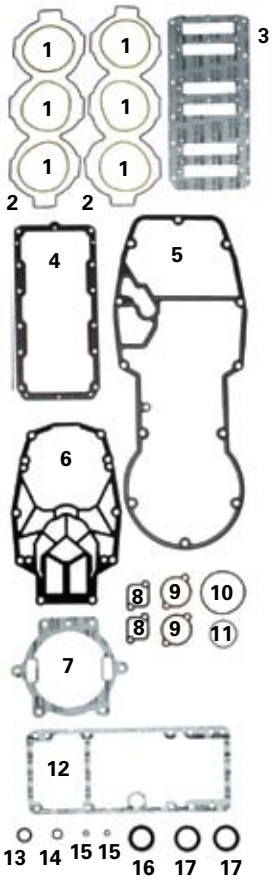

POWER HEAD GASKET KIT

Kit No. 500-221-05

O.E. No. 27-889439A01

Fits: Sport Jet V6 DFI 250 hp

INDIVIDUAL GASKETS/SEALS

Item #	Description	O.E. No.	Qty.	Part No.
1	Inner Head O-Ring	25-884391	6	**505-53**
2	Outer Head O-Ring	818574	2	**505-50**
3	Reed Block Gasket	27-804680	1	**516-40-01**
4	Plenum Gasket	804679 3	1	**516-31-01**
5	Engine Adaptor Gasket	27-883051	1	**510-45**
6	Base Gasket	27-8329335	1	**510-37-01**
7	Expansion Chamber To Adaptor Plate Gasket	27-880738	1	**510-39**
8	Thermostat Gasket	27-850318	2	**516-39**
9	Relief Valve Gasket	27-88907	2	**540-28-01**
10	Lower Cap O-Ring	25-62700	1	**526-19**
11	Upper Crank O-Ring	25-64067	1	**526-29**
12	Drive Housing Gasket	27-859452	1	**510-44**
13	End Cap O-Ring	25-35126	1	**526-15**
14	O-Ring	25-45711	1	**008-415**
15	Temperture Sensor O-Ring	25-627021	1	**526-08**
16	Crank Oil Seal	26-815449	1	**550-37T**
17	Lower Crank Oil Seal	26-830898-1	2	**550-38T**

Carburetor Kits

Picture Gallery

Part No. 600-02
OE No. 855546A 1

Part No. 600-05
OE No. 1395-9761-1

Part No. 600-10
For replacement float order
Part No. 600-10-01
OE No. 1395-6452/27-809077

Part No. 600-20
OE No. 810749-2

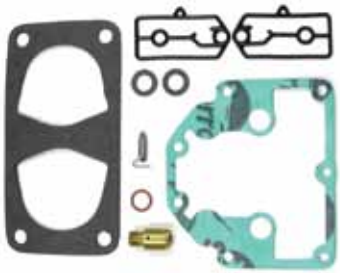

Part No. 600-25
OE No. 810749-3

For needle and seats see chart on next page.

New York • 1-800-222-3375
631-244-8060 • fax 631-244-0556
61 Floyd Run, Bohemia, NY 11716

Puerto Rico
787-832-2499 • fax 787-832-2939
234 Balboa St., Mayaquez, Puerto Rico 00681-2605

e-mail: info@wsmparts.com • www.wsmparts.com

Carburetor Kits

Application Chart

Part No. 600-62
O.E. No. 802706A1

Part No. 600-66
O.E. No 804346T02

Model/ hp	Serial No./Year	Carb. Kit	Needle & Seat
4	855546A 1	600-02*	-
4.5 (WMD-1)	1980-85	-	600-18NS
4.5	855546A 1	600-02*	-
5 hp 4-Stroke	98-up	600-62	
5	855546A 1	600-02*	-
6	A197112-UP	600-05	-
8	A197112-UP	600-05	-
9.9	A197112-UP	600-05	-
9.9 hp 4-Stroke	99-up	600-62	
10 SEAPRO	ALL	600-05	-
MARATHON	ALL	600-05	-
XR10	ALL	600-05	-
MAG10	ALL	600-05	-
15	A197112-UP	600-05	-
15 SEAPRO	ALL	600-05	-
MARATHON	ALL	600-05	-
SUPER 15	6443973-UP	600-05	-
18	6443973-UP	600-05	-
20	6443973-UP	600-05	-
20 JET	6443973-UP	600-05	-
25	6443973-UP	600-05	-
30 (2 CYL)	G053314-UP		600-15N
35 (WMK-38)	1984-89		600-18NS
40	1970-74		600-18NS
40	1975-83		600-18NS
40 (2 CYL)	G053314-UP		600-18NS
50 (3 CYL)	1986-90		600-18NS
50, 55, 60 (3 CYL)	D000750-UP		600-15N
60 (3 CYL)	1984-90		600-18NS
65	1972-75		600-18NS
65	1976		600-18NS
65 JET (3 CYL)	A996142-UP		600-15N
70	1977-83		600-18NS
70 (3 CYL)	A996142-UP		600-15N
75	1984-86		600-18NS
75 (3 CYL)	A996142-UP		600-15N
75 & 90 hp (4 Stroke)		600-66	
80 (3 CYL)	A996142-UP		600-15N
80 (4 CYL)	1969-72		600-18NS
80 (4 CYL)	1978-83		600-18NS
80 JET (4 CYL)	B209468-UP		600-15N

**Needle & Seat Included in Kit.*

PRECISION
Arizona • 1-800-977-1414
480-966-1550 • fax 480-966-1565
16441 N. 91St. Suite 105 Scottsdale, AZ 85260
Florida • 1-866-417-4072
941-238-0960 • fax 941-238-0965
1899 60th Place East, Bradenton, FL 34203
e-mail: info@wsmparts.com • www.wsmparts.com

Carburetor Kits

Application Chart

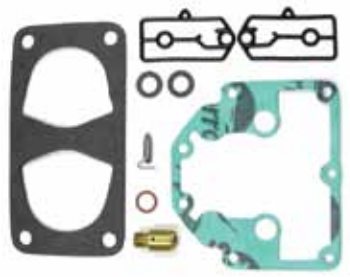

Model/ hp	Serial No./Year	Carb. Kit	Needle & Seat
85	1973-75		600-18NS
85	1976-77		600-18NS
90 (3 CYL)	A996142-UP		600-15N
90 (6 CYL)	1978-86		600-18NS
100 (4CYL)	B209468-UP		600-15N
115 (4 CYL)	B209468-UP		600-15N
115 (6 CYL) (WMK)	1970-88		600-18NS
125 (4 CYL)	B209468-UP		600-15N
V135	C239553-UP	600-20*	600-20NS
140	1972		600-18NS
140	1978-80		600-18NS
150	1973-78		600-18NS
175	C239553-Up	600-20*	600-20NS
175 Jet	151580-up	600-25*	600-20NS
200	C239553-Up	600-20*	600-20NS
200 Jet	151580-up	600-25*	600-20NS
225	D280813-G303045	600-20*	600-20NS
225	G303046-Up	600-25*	600-20NS
225 (3L) Sea Pro	D280813-G303045	600-20*	600-20NS
225 (3L) Sea Pro	G303046-Up	600-25*	600-20NS
XR2	C239553-Up	600-20*	600-20NS
V-6 (2.4)	1979-90	600-10*	600-10NS
V-6 (2.5)	19691-UP	600-20*	600-20NS
XR2, XR6/MAG III	C239553-Up	600-20*	600-20NS
XR4	WH-41, WH-41A 1988-90		
2.5L	WMH-19,45,46,47	600-20*	600-20NS
3.0L	WMV-6,7,11,12 1996-Up	600-25*	600-20NS

**Needle & Seat Included in Kit.*

New York • 1-800-222-3375
631-244-8060 • fax 631-244-0556
61 Floyd Run, Bohemia, NY 11716
Puerto Rico
787-832-2499 • fax 787-832-2939
234 Balboa St., Mayaquez, Puerto Rico 00681-2605
e-mail: info@wsmparts.com • www.wsmparts.com

Fuel Pumps

Part No. 600-102
O.E No. 826398T3
Fits: 25-60 Hp 4 Strokes

Part No. 600-090
O.E No.14360A78
Fits: 30-300hp

Part No. 600-095
O.E No.803529T06
Fits: 4 Strokes

Part No. 600-110
O.E. No. 809088T1
Fuel Pump With #600-292 Filter
(Filter O.E. 808504)
Fits: 150-200 EFI & 240 hp Sport Jet

Part No. 600-111
O.E. No. 880889t01
Fits: 115 hp 4 Stroke

Part No. 600-112
O.E. No. 883202T01, T02
Fits: 30-60 hp 4 Stroke
2002-2005

Part No. 600-113
O.E. No. 855427A1
Fits: DFI, OptiMax

Part No. 600-114
O.E. No. 888725T02
Mercury high pressure pump
Fits: 3 Cyl 75, 90, 115 hp
3.0L DFI

Part No. 600-116
O.E No. 14307T01 (Bosch Pump)
Replaces: Both Screw and
Spade Terminal Fuel Pumps
Fits: 175-200 hp EFI

Part No. 600-117
O.E No. 883202A02, T02
Fits: 30-60 Hp 2003-2006

PRECISION
Arizona • 1-800-977-1414
480-966-1550 • fax 480-966-1565
16441 N. 91St. Suite 105 Scottsdale, AZ 85260
Florida • 1-866-417-4072
941-238-0960 • fax 941-238-0965
1899 60th Place East, Bradenton, FL 34203
e-mail: info@wsmparts.com • www.wsmparts.com

Fuel Pumps

Part No. 600-119
O.E. No. 881705T01
Fits: 2.5 & 3.0 Liter EFI

Part No. 600-120
O.E No. 880596T55
Fits: Verado Hi-Pressure

Part No. 600-121
O.E No. 880596T58
Fits: Verado Lift Pump

Part No. 600-122
O.E. No. 888246T,
888246T01
Fits: 225hp EFIi 4-Stroke

Part No. 600-122-01
Fits: F200-F225 2002-Up
O.E No 888251T01

Part No. 600-131
O.E No. 880889T02,
8M0065218
Fits:75-100Hp 4 Stroke
2005-Up

VST O-Rings

Part No. 600-107
O.E. No. -25-889319 VST
O-Ring
Fits: 75-250 DFI

Part No. 600-108
O.E. No. 25-809086
VST O-Ring
Fits: 150-300 hp

New York • 1-800-222-3375
631-244-8060 • fax 631-244-0556
61 Floyd Run, Bohemia, NY 11716
Puerto Rico
787-832-2499 • fax 787-832-2939
234 Balboa St., Mayaquez, Puerto Rico 00681-2605
e-mail: info@wsmparts.com • www.wsmparts.com

Fuel Filters

Part No. 600-280
Fits: Optimax and Verado
O.E. 35-884380T

For Use with Fuel Filter
Part No. 600-280
Part No. 999-100
O.E. No. 91-896661

Part No. 600-290
Replaces OEM No. 35-888289T2

Part No. 600-292
Fits: Mercury VST Filter
2.5 & 3.0L
O.E. 808504 T1

Part No. 600-295
Replaces OEM No. 881540

Part No. 600-289
O.E. No. 35-826964T

Part No. 600-308
O.E. No. 35-87946A3
Fits: 6-25 hp

Part No. 600-273
O.E. No. 35-16248

Part No. 600-274
O.E. No. 35-80365M

Part No. 600-276
O.E. 35-877565T1

WSM Spin On Fuel Filters

Part No. 600-448
Spin on Fuel Filter with Sensor Fits: 1995 & Prior
O.E. 35-18458A1, 35-18458A3, 35-18458Q3,
35-18458T3

Part No. 600-450
Spin on Fuel Filter with Sensor Fits: 1996 & Up
O.E. 35-18458A4, 35-18458Q4, 35-18458T4

PRECISION
Arizona • 1-800-977-1414
480-966-1550 • fax 480-966-1565
16441 N. 91St. Suite 105 Scottsdale, AZ 85260
Florida • 1-866-417-4072
941-238-0960 • fax 941-238-0965
1899 60th Place East, Bradenton, FL 34203
e-mail: info@wsmparts.com • www.wsmparts.com

Oil Filters

Part No. 615-110
O.E. 35-822626Q1,
35-822626A03
Fits: 8-15 hp
G760300 & Up,
15/20 hp (351cc),
25 (492cc) hp

Part No. 006-563
O.E. 35-822626K04
Fits: 25 (498cc), 30 (747cc),
40 3 cyl (747cc), 50 (9356cc),
40-60 4 cyl (996 cc), 75/90,
75/90 EFI, 115 EFI (1741 CC)

Part No. 615-175
O.E. 35-822626Q2, Q04
Fits: 25-115 hp

Part No. 615-165
O.E. 35-877761K01
Fits: 75-115 Hp
1B366823 & Up

Part No. 615-100
O.E. 35-822626T 7
Fits: 225 EFI

Part No. 615-160
O.E. 35-896546T
Fits: 135, 150, 175 Verado

Part No. 615-170
O.E. No. 35-883701K01
Fits: Verado 200-275 hp

Oil Drain Plug Gaskets

Part No. 555-20
O.E 27-828816
Fits: 15-115 Hp

Part No. 555-22
O.E No. 27-888658 6
Fits: 225 Hp

Part No. 555-24
O.E No. 26-888593
Fits: 135-300 Hp Verado's

New York • 1-800-222-3375
631-244-8060 • fax 631-244-0556
61 Floyd Run, Bohemia, NY 11716
Puerto Rico
787-832-2499 • fax 787-832-2939
234 Balboa St., Mayaquez, Puerto Rico 00681-2605
e-mail: info@wsmparts.com • www.wsmparts.com

Tilt Tubes & Parts

986-105

986-165

Aplication	Tillt Tube	Bushing	Washer	Nyloc Nut	Jam Nut
2 Cyl 1976-up	986-105	986-200	986-300	986-400	986-405
3,4 & 6Cyl	986-165				986-410

Tilt Tubes	Thickness	Length	Short Threaded End	Long Threaded End	Thread Size
986-105	7/8"	12"	1-3/4"	1-3/4"	7/8" x 14
986-165	1"	12 1/8"	5/8". 1" dia.	1-1/2", 7/8 dia	-

Tilt Tube Bushings	Inside Diameter	Length
986-200	7/8"	1"
Washers		
986-300	7/8"	
986-305	1"	

Tilt Tube Grease Nuts

CABLE GREASE NUT

Part No. 986-500

1" x 14 Pitch Thread
Built in Grease seal with easy steer nuts, it lubricates and seals out moisture and salt water.

CABLE GREASE NUT

Part No. 986-505

7/8" x 14 Pitch Thread

CABLE NUT FOR CABLE SIDE

Part No. 986-510

7/8" X 14 Pitch Threads I.D. or O.D.

Tilt Tube Reamer & Steering Tube Brush

Reamer

TILT TUBE REAMERS

Part No. 986-600

3/8" Shank Dia.
Specialy ground OD to accommodate most Tilt Tubes. Made of high speed tool steel.

Steering Tube Cleaning Brush

TILT TUBE REAMERS

Part No. 986-605

PRECISION
Arizona • 1-800-977-1414
480-966-1550 • fax 480-966-1565
16441 N. 91St. Suite 105 Scottsdale, AZ 85260
Florida • 1-866-417-4072
941-238-0960 • fax 941-238-0965
1899 60th Place East, Bradenton, FL 34203
e-mail: info@wsmparts.com • www.wsmparts.com

Drain Plug Gasket Kits

Part No.	Description	O.E. No.
555-01K	Drain Plug Gasket Assortment Kit Fits: Mercury, J/E, Yamaha, Suzuki, Nissan/Tohatsu	

Note: Kits Included 50 Pieces In Each Kit

Drain Plug Replacement Gaskets

Sold in packs of 50 Pieces

Part No.	Description	O.E. No.
555-11	Johnson Evinrude/Mercury	12-19183 / 307552
555-15	Johnson / Evinrude	311598
555-13	Nissan / Tohstsu	332600060M
555-14	Suzuki	09168-10022
555-12	Volvo	
555-10	Yamaha	90430-08020-00

Impellers Gallery

Part No. 700-155
O.E. No. 47-43026T2

Part No. 700-200
O.E. No. 47-65959,
47-89983T

Part No. 700-205
O.E. No. 47-803631T

Part No. 700-216
O.E. No. 47-42038-2

Part No. 700-225
O.E. No. 47-8508913,
47-85089110

Part No. 700-230
O.E. No. 47-19453T

Part No. 700-403
O.E. No. 47-95611M

Part No. 700-410
O.E. No. 47-8479M

Part No. 700-420
O.E. No. 47-81423M,
47-97108M

Part No. 700-435
O.E. No. 47-84027M

New York • 1-800-222-3375
631-244-8060 • fax 631-244-0556
61 Floyd Run, Bohemia, NY 11716
Puerto Rico
787-832-2499 • fax 787-832-2939
234 Balboa St., Mayaquez, Puerto Rico 00681-2605
e-mail: info@wsmparts.com • www.wsmparts.com

Service Kits Gallery

Part No. 725-155
O.E. No. 47-43026A06

Part No. 725-157
O.E. No. 46-89984T5, 46-89984Q5

Complete Kits Gallery

Part No. 750-157
O.E. No. 46-60357A1, 46-96148A5

Impeller Kits

Hp	Model	Serial No.	Impeller	Service Kit	Complete Kit
MARINER					
8A	665	3000100 & Below	**700-403**		
8B	665	3000100 & UP	**700-403**		
9.9C	682	All	**700-435**		
15A	651	3000100 & Below	**700-403**		
15C	684	All	**700-435**		
20C (E) (EL), (M) (ML)	6A9	250819 & Below	**700-410**	-	
20C (E) (EL), (M) (ML)	6A9	250820 & UP	**700-410**	-	
25C (E) (EL), (M) (ML)	695	014870 & Below	**700-410**	-	
25C (E) (EL), (M) (ML)	695	014871 & UP	**700-410**	-	
28	664	All	**700-410**		
30	689	All	**700-410**		
30A (E) (EL), (M) (ML)	689	014805 & Below	**700-410**	-	
30A (E) (EL), (M) (ML)	689	105325 & UP	**700-410**	-	
48/48W	670	All	**700-420**		
55/W55	663	All	**700-420**		
60	675,6F0	All	**700-420**		

PRECISION
Arizona • 1-800-977-1414
480-966-1550 • fax 480-966-1565
16441 N. 91St. Suite 105 Scottsdale, AZ 85260
Florida • 1-866-417-4072
941-238-0960 • fax 941-238-0965
1899 60th Place East, Bradenton, FL 34203
e-mail: info@wsmparts.com • www.wsmparts.com

Impeller Kits

Hp	Model	Serial No.	Impeller	Service Kit	Complete Kit
MERCURY					
3.5		6202173&Up	700-215		
3.6		5404651&Up	700-215		
4	2 Cyl.	5589202&Up	700-215		
4	Made In U.S.A (.438 ID)	5595532-9075838	700-215		
4.5		5595532&Up	700-215		
7.5 (.438 ID)		5206650-UP	700-215		
8		A197112-UP	700-216		
8	4 Stroke Bodensee	G760300-UP	700-216		
9.8		1470349-1865778	700-435		
9.8 (.438 ID)		5206550-UP	700-215		
9.9	4 Stroke	G760300&UP	700-216		
XR10	Sea Pro	D038000&UP	700-216		
15		B292414&UP	700-216		
15	Sea Pro	G044365&UP	700-216		
18		5837437-6416712	700-225		
20XD		6443973-UP	700-225		
25	3 Cyl.	E268781&UP	700-225		
25XD		6443973-UP	700-225		
30		1271884-1448139	700-200		
30 Jet		C159200-G589999	700-200		
30 Jet		G5755000 & up	700-200		
30	2 Cyl.	G053314&UP	700-225		
30	4 Stroke 2.31:1 ratio		700-155	725-155	
30	3 Cyl. 4 Stroke		700-155	725-155	
30	2:1 ratio	OG760300-UP	700-225		
35		1217222-1448139	700-200		
35		1571114-6445652	700-200		
35		6445653 & up	700-200		
40		1224481-1476509	700-200		
40		2874704-4362214	700-200		
40		4362215-4860102	700-200		
40	2 Cyl.	4862103-6445653	700-200		
40	2 Cy	OG053314 & up	700-225		
40	4 Cycle 4 Stroke		700-155	725-155	
40	3 Cyl.	OG531301 & up	700-225		
40	4 Cyl.	OC159200 & up	700-200		
40	4 Stroke Std.	OG231123-OG760299	700-225		
40	4 stroke 4 Cyl. 1.83:1 ratio	OT228405 & up	700-230		
40	4 Stroke Big Foot & 2.31:1 ratio	OT228405 & up	700-155	725-155	
40	4 stroke 4 Cyl. 2.31:1 ratio	OT228405 & up	700-155	725-155	
40	EFI 4 Stroke 1.83:1 ratio	OT409000 & up	700-230		
40	EFI 4 Stroke 2.31:1 ratio	OT409000 & up	700-155	725-155	

New York • 1-800-222-3375
631-244-8060 • fax 631-244-0556
61 Floyd Run, Bohemia, NY 11716
Puerto Rico
787-832-2499 • fax 787-832-2939
234 Balboa St., Mayaquez, Puerto Rico 00681-2605
e-mail: info@wsmparts.com • www.wsmparts.com

Impeller Kits

Hp	Model	Serial No.	Impeller	Service Kit	Complete Kit
40	4-Stroke Big Foot & 2.31:1 ratio	G231123&UP	700-155	725-155	
45		1279685-1476509	700-200		
45		5531630-UP	700-200		
45	Jet 3 Cyl.	D000750&UP	700-230		
45	4 Stroke Std. Bodensee	OG231123 & up	700-225		
45	4 stroke Big Foot Bodensee	OG231123 & up	700-155	725-155	
50		1421113-1521913	700-200		
50		1521914-2514918	700-200		
50		2514919-4357639	700-200		
50		4357640-4962055	700-200		
50	4 Cyl.	4962056 & up	700-200		
50	3 Cyl.	6428681-OD000749	700-200		
50	3 Cyl.	OD000750-OG589999	700-230		
50	3 Cyl.	OG590000 & up	700-225		
50	4 Cyl. 4 Stroke		700-155	725-155	
50	4 Stroke Std.	OG231123 & up	700-225		
50	4 Stroke 4 Cyl. 1.83:1 ratio	OT178500 & up	700-230		
50	4 Stroke 4 Cyl. 2.31:1 ratio	OT178500 & up	700-155	725-155	
50	EFI 4 Stroke 1.83:1 ratio	OT409000 & up	700-230		
50	EFI 4 Stroke 2.31:1 ratio	OT409000 & up	700-155	725-155	
50	4 Stroke Big Foot	OG231123 & up	700-155	725-155	
55	3 Cyl.	OD000750 & up	700-230		
60		6428681-OD000749	700-200		
60	Sea Pro/ Marathon/Big foot	OD000750 & up	700-155	725-155	
60	3 Cyl.	OD000750 & up	700-230		
60	4 Stroke Std.	OT178500 & up	700-230		
60	4 Stroke Big Foot	OT178500 & up	700-155	725-155	
60	4 Cyl. 4 Stroke		700-155	725-155	
65	4 Cyl.	1542745-3293183	700-205	725-157	
65	3 Cyl.	3283184-4382056	700-200		
65	3 Cyl.	4382057-4571651	700-200		
65	Jet	OD283222&UP	700-155	725-155	
70		1413611-1566239	700-205	725-157	
70	3 Cyl.	4571652-4977156	700-200		
70		4977157-OB110053	700-200		
70		OB110054 & UP	700-155	725-155	
75	4 Cyl.	6432901 & up	700-205	725-157	750-157
75	3 Cyl.	A996142-OC221999	700-155	725-155	
75	3 Cyl. 1.5 L DFI		700-155	725-155	
75	3 Cyl. Impeller I.D. .456	OC222000-& up	700-155	725-155	

PRECISION
Arizona • 1-800-977-1414
480-966-1550 • fax 480-966-1565
16441 N. 91St. Suite 105 Scottsdale, AZ 85260
Florida • 1-866-417-4072
941-238-0960 • fax 941-238-0965
1899 60th Place East, Bradenton, FL 34203
e-mail: info@wsmparts.com • www.wsmparts.com

Impeller Kits

Hp	Model	Serial No.	Impeller	Service Kit	Complete Kit
75	4 Stroke	OG960500 & UP	700-155	725-155	
75	EFI 4 Stroke		700-155	725-155	
80		1335468-3493912	700-205	725-157	
80	4 cyl.	4831999-6432900	700-205	725-157	750-157
80	3 cyl.	A996142-UP	700-155	725-155	
80	EFI 4 Stroke		700-155	725-155	
80	Jet	OD28322&UP	700-155	725-155	
85		1460999-4841998	700-205	725-157	
85	4 Cyl.	4590512 & up	700-205	725-157	750-157
90		1766824-1869775	700-205	725-157	
90	6 Cyl.	4845301 & up	700-205	725-157	750-157
90	3 Cyl.	OA996142 & UP	700-155	725-155	
90	3 Cyl. 1.5L DFI		700-155	725-155	
90	4 Stroke	OG960500 & UP	700-155	725-155	
95		1869776-2318585	700-205	725-157	
100	6 Cyl.	1464949-3253111	700-205	725-157	
100	4 Cyl.	OB209468 & UP	700-155	725-155	
100	EFI 4 Stroke		700-155	725-155	
105	Jet	0D182000&UP	700-205	725-157	
110		1870204-2314955	700-205	725-157	
115		2836019 & up	700-205	725-157	
115	6 Cyl.	4694237 & up	700-205	725-157	
115	4 Cyl.	OB209468 & UP	700-155	725-155	
115	4 Cyl.	C100000 & UP	700-155	725-155	
115	3 Cyl. 1.5L DFI		700-155	725-155	
115	3 Cyl DFI	OT801000 & UP	700-155	725-155	
115	4 Stroke	OT178500 & up	700-155	725-155	
125		2314956-3253111	700-205	725-157	
125	4 Cyl.	OD283222 & UP	700-155	725-155	
135		2839369-3293233	700-205	725-157	
135	V6	A904646-UP	700-205	725-157	750-157
135	4 Stroke Verado		700-155	725-155	
140		3293234-3502805	700-205	725-157	
140		4865678-5327662	700-205	725-157	750-157
140	Jet	0D08200 & UP	700-205	725-157	750-157
150		3502806-4121434	700-205	725-157	
150		4121435-4868647	700-205	725-157	750-157
150		A904645 & Below	700-205	725-157	
150		A904646-UP	700-205	725-157	
150	4 Stroke Verado		700-155	725-155	
175		6618750 & Below	700-205	725-157	
175		6618751 & up	700-205	725-157	
175	4 Stroke Verado		700-155	725-155	

New York • 1-800-222-3375
631-244-8060 • fax 631-244-0556
61 Floyd Run, Bohemia, NY 11716
Puerto Rico
787-832-2499 • fax 787-832-2939
234 Balboa St., Mayaquez, Puerto Rico 00681-2605
e-mail: info@wsmparts.com • www.wsmparts.com

Impeller Kits

Hp	Model	Serial No.	Impeller	Service Kit	Complete Kit
200		6625220 & below	700-205	725-157	
200		6625221-UP	700-205	725-157	
200	4 Stroke Verado		700-155	725-155	
V-200	DFI (3.0L)	OG386496-& UP	700-155	725-155	
220		OB117316-UP	700-205	725-157	
225		5625028-UP	700-205	725-157	
225	4 Stroke Verado		700-155	725-155	
V-225 (3.0L) Carb & EFI		OD280813 & UP	700-155	725-155 -	
V-225 DFI		OG590000 & UP	700-155	725-155	
2.4 EFI		ALL	700-205	725-157	750-157
XR-4 / Magnum II		B242885-UP	700-205	725-157	
250	4 Stroke Verado		700-155	725-155	
250 (3.0L) EFI		OG129222 & up	700-155	725-155	
275	4 Stroke Verado		700-155		

Water Pump Hsg. Plastic Sleeve
Part No. 770-100
Mercury V6 4 Strokes
O.E No 23-888690

Water Pump Hsg. Cup
Part No. 770-105
Mercury V6 4 Strokes
O.E No.23-8886901

Water Pump Hsg. Washer
Part No. 770-110
Mercury V6 4 Stroke
O.E No. 12-8556822

Water Pump Hsg. Wave Washer
Part No. 770-115
Mercury V6 4 Stroke
O.E No. 8883632

Water Pump Sleeve Kit
Part No. 770-100K

Poppet Valve Diaphram
Part No. 540-36
30-115 hp
O.E. No. 8128871 &
812887002

Poppet Valve Diaphram
Part No. 540-34
O.E. No. 64877 1
Flexible Edge

Poppet Valve Diaphram
Part No. 540-33
O.E. No. 14479 1
Rigid Edge

PRECISION
Arizona • 1-800-977-1414
480-966-1550 • fax 480-966-1565
16441 N. 91St. Suite 105 Scottsdale, AZ 85260
Florida • 1-866-417-4072
941-238-0960 • fax 941-238-0965
1899 60th Place East, Bradenton, FL 34203
e-mail: info@wsmparts.com • www.wsmparts.com

Thermostats

Thermostat
Part No. 775-10
110 degree
O.E. No. 850055
Fits: 30-60 hp 3 Cyl.

Thermostat 130 Deg
Part No. 775-15
3.0L EFI + DFI
O.E. No. 885599004

Thermostat
Part No. 775-20
120 degree
O.E. No. 14586

Inverted Thermostat
Part No. 775-25
143 degree
O.E. No. 75692

Thermostat Gasket (Rubber)
Part No. 540-32
O.E. No. 27-62386001

Thermostat
Part No. 775-110
143 degree Stainless Steel
O.E. No. 833072

Thermostat
Part No. 775-125
143 degree Brass
O.E. No. N/A

Thermostat Housing
Part No. 775-60
4 & 6 Cyl Verado
O.E. No. 892864T04

Thermostat
Part No. 775-210
4 Stroke 75-225 hp 50 Celsius
O.E. No. 855676 1

Thermostat
Part No. 775-205
Fits: 4 Stroke 60 Celsius
O.E. No 855676

New York • 1-800-222-3375
631-244-8060 • fax 631-244-0556
61 Floyd Run, Bohemia, NY 11716
Puerto Rico
787-832-2499 • fax 787-832-2939
234 Balboa St., Mayaquez, Puerto Rico 00681-2605
e-mail: info@wsmparts.com • www.wsmparts.com

Protorque Alternators

Gallery

PH300-0030 *12 Volt, 50 Amp*

Delco Aftermarket Replacement

Delco Style Alternator to Replace 2.5L Mercury Outboards Internal Fan with Internal Regulator & 4-Groove Serpentine Pulley
Will Not Replace Nippondenso Units

Replaces:
DELCO
19020703, 19020706
MERCURY
881248T, 875285T1, 889955

PH300-0047 *12 Volt, 50 Amp*

Delco Aftermarket Replacement

Delco Style Alternator to Replace Mercury/Mariner Internal Fan with Internal Regulator & 4-Groove Serpentine Pulley

Replaces:
DELCO
8400080
MERCURY MARINE
50-897755T
897755T

PH300-0031 *12 Volt, 50 Amp*

Delco Aftermarket Replacement

Delco Style Alternator to Replace 3.0L Mercury Outboards Internal Fan with Internal Regulator & 4-Groove Serpentine Pulley
Will Not Replace Nippondenso Units

Replaces:
DELCO
19020704, 19020707
MERCURY
881247A1, 875286A1, 889956

PH300-0033 *12 Volt, 70 Amp*

Delco Aftermarket Replacement

Delco Style Alternator to Replace 3.0L Mercruiser 1999 & Up Internal Fan with Internal Regulator & V-Belt Pulley

Replaces:
DELCO
19020604
MERCRUISER
862030T

PH300-0048 *12 Volt, 70 Amp*

Delco Aftermarket Replacement

Delco Style Alternator to Replace Mercury Outboards Internal Fan with Internal Regulator & 6-Groove Serpentine Pulley

Replaces:
DELCO
19020618
MERCURY MARINE
892940T
892940T01

PH300-0019 *12 Volt, 50 Amp*

Nippondenso Aftermarket Replacement

Nippondenso Alternator to Replace Mercury & Mariner for 225/250 3.0L Carb & EFI Internal Fan with Internal Regulator & Single Pulley

Replaces:
NIPPONDENSO
101211-3021
MERCURY MARINE
821663A1

PH300-0021 *12 Volt, 50 Amp*

Nippondenso Aftermarket Replacement

Nippondenso Alternator to Replace Mercury & Mariner for 200/225 3.0L DFI Engines Internal Fan with Internal Regulator & Serpentine Pulley

Replaces:
NIPPONDENSO
101211-3380
MERCURY MARINE
828506

PRECISION
Arizona • 1-800-977-1414
480-966-1550 • fax 480-966-1565
16441 N. 91St. Suite 105 Scottsdale, AZ 85260
Florida • 1-866-417-4072
941-238-0960 • fax 941-238-0965
1899 60th Place East, Bradenton, FL 34203
e-mail: info@wsmparts.com • www.wsmparts.com

Protorque Starters

Application Chart

H.P.	Model	Serial # From	Serial # To	O.E. No.	WSM Part No.
6		A197112	& Up	50-90983A1	PH130-0021
8-9.9	4-Stroke		95-98	50-825991A2	PH130-0014
8 / 9.9 / 15		A197112	& Up	50-90983A1	PH130-0021
8 / 9.9 / 15	4-Stroke		98-09	50-859168	PH130-0034
18		5837437	& Up	50-90983A1	PH130-0021
20		6443973	& Up	50-90983A1	PH130-0021
25		5705532	& Up	50-90983A1	PH130-0021
25	4-Stroke	-	-	50-830308-1	PH130-0029
25	2-Stroke		87-90	50-814980M	PH130-0049
30	2 cyl.	G053314	& Up	50-822462	PH130-0024
30	Jet	G159200	G589999	50-73521	PH130-0011
30	Jet 3 cyl.	G590000	T408999	50-822462	PH130-0024
30	4-Stroke	-	-	50-854636	PH130-0028
30	2-Stroke		87-90	50-814980M	PH130-0049
35 / 40	2-Stroke		80-87	50-41583	PH130-0072
35 / 40	2 cyl.	6445652	& Below	50-55601A2	PH130-0040
40	2 cyl.	G053314	& Up	50-822462	PH130-0024
40	3 cyl.	G590000	& Up	50-822462	PH130-0024
40	4 cyl.	C159200	& Up	50-73521	PH130-0011
40	Jet	T178500	& Up	50-822462	PH130-0024
40	4-Stroke	-	-	50-854636	PH130-0028
40-60			78-85	50-81490M	PH130-0007
40	2-Stroke		87-90	50-814980M	PH130-0049
40-60	4-Stroke		01-11	50-859377T	PH130-0033
45	4 cyl.	5531630	& Up	50-73521	PH130-0011
45	Jet	D000750	G589999	50-44369A1	PH130-0015
45	Jet	G590000	T129554	50-822462	PH130-0024
50	4 cyl.	4357639	& Below	50-38890A1	PH130-0040
50	4 cyl.	4357640	& Up	50-73521	PH130-0011
50	3 Cyl.	B122930	G589999	50-44369A1	PH130-0015
50	3 Cyl.	G590000	& Up	50-822462	PH130-0024
50	3 Cyl.	-	-	50-65436	PH130-0041
55	3 Cyl.	D000750	G589999	50-44369A1	PH130-0015
55	3 Cyl.	G590000	& Up	50-822462	PH130-0024
60	3 Cyl.	-	-	50-65436	PH130-0041
60	3 Cyl.	6428681	G589999	50-44369A1	PH130-0015
60	3 Cyl.	G590000	& Up	50-822462	PH130-0024
60 Big Foot	3 Cyl.	G590000	G760299	50-822462	PH130-0024
65	4 Cyl.	2803822	3293183	50-57867A1	PH130-0042
65	3 Cyl.	3293184	4571651	50-44369A1	PH130-0015
65	Jet	D283222	& Up	50-66015	PH130-0041
70	3 Cyl.	-	-	50-65436	PH130-0041
70	3 Cyl.	457165	A996142	50-44369A1	PH130-0015
75-90	4-Stroke	22-18347-N	00-05	50-804312T1	PH130-0055
75-115	4-Stroke	22-18349N	01-11	50-881368T	PH130-0057

New York • 1-800-222-3375
631-244-8060 • fax 631-244-0556
61 Floyd Run, Bohemia, NY 11716
Puerto Rico
787-832-2499 • fax 787-832-2939
234 Balboa St., Mayaquez, Puerto Rico 00681-2605
e-mail: info@wsmparts.com • www.wsmparts.com

Protorque Starters

Application Chart

H.P.	Model	Serial # From	Serial # To	O.E. No.	WSM Part No.
80	4 Cyl.	2783253	3493912	50-57867A1	PH130-0042
80	4 Cyl.	4831999	& Up	50-66015	PH130-0041
85	4 Cyl.	3865694	& Below	50-58788	PH130-0042
85	4 Cyl.	3865695	4366801	50-67341	PH130-0010
80	Jet	D283222	& Up	50-66015-1	PH130-0019
90		4845301	& Up	50-72467	PH130-0042
90	3 Cyl.	A996142	& Up	-	PH130-0041
100	4 Cyl.	B209468	& Up	50-66015-1	PH130-0019
105	Jet	G760299	& Below	50-44414	PH130-0046
115	6 Cyl.	4855153	& Up	50-72467	PH130-0042
115	4 Cyl.	C10000	& Up	50-66015-1	PH130-0019
115			73-88	50-64975	PH130-0037
125	4 Cyl.	D283222	& Up	50-66015-1	PH130-0019
135	V-6	A904646	G960499	50-79472	PH130-0046
140	6 Cyl. Inline	4865678	& Up	50-72467	PH130-0042
140	Jet	G960499	& Below	50-44414	PH130-0046
150		4121435	& Up	50-72467	PH130-0042
V150		4868998	G960499	50-79472	PH130-0046
V150	XR2	4868998	A904645	50-44414	PH130-0046
150	XR4	B242885	D819999	50-79472	PH130-0046
150	XR6	D082000	G960499	50-79472	PH130-0046
150	EFI	G303046	T408999	50-79472	PH130-0046
150			73-88	50-64975	PH130-0037
150-225	V6 W/135 Tooth		78-88	50-86976	PH130-0067
V175		4301235	G960499	50-79472	PH130-0046
175	EFI,XRI,MAG	D000750	G960499	50-44414	PH130-0046
175			73-88	50-64975	PH130-0037
200		4839034	G960499	50-79472	PH130-0046
200	EFI, XRI	C100861	G960499	50-44414	PH130-0046
2.0, 2.4 L	V6			50-60594A1	PH130-0020
2.4, 2.5	EFI	ALL	-	50-79472	PH130-0046
2.5	Carb.	ALL	-	50-79472	PH130-0046
2.5	Sport Jet	1997	1999	50-832997	PH130-0031
3.0 L	DFI	-	-	50-833153-5	PH130-0030
3.4	MOD VP	ALL	-	50-79472	PH130-0046
225 3.0	Carb.	D280813	T408999	50-818445-3	PH130-0023
225/250	EFI 3.0L	G129222	& Up	50-818445-3	PH130-0023
250XB		G980600	& Up	50-818445-3	PH130-0023

PRECISION
Arizona • 1-800-977-1414
480-966-1550 • fax 480-966-1565
16441 N. 91St. Suite 105 Scottsdale, AZ 85260
Florida • 1-866-417-4072
941-238-0960 • fax 941-238-0965
1899 60th Place East, Bradenton, FL 34203
e-mail: info@wsmparts.com • www.wsmparts.com

Protorque Starters

Picture Gallery

Part No. PH130-0006
Mercury
2 Cyl.
O.E. No. 853805T03

Part No. PH130-0007
Mariner
Fits 40-60 hp 1978-85
O.E. No. 50-81490M, 50-92669M, 50-97072M, 50-97072T

Part No. PH130-0009
Mercury
75-120 hp Sport Jet
O.E. No. 50-819968-1,-2,-3,-4,-T4

Part No. PH130-0010
Mercury
85 hp Engines
Replaces O.E. No. 50-67341, 50-30842

Part No. PH130-0011
Mercury
1976-1994, 40-50 hp Engines
Replaces O.E. No. 50-73521, 50-73521-1

Part No. PH130-0014
Fits 8.0 - 9.9 hp 4 Stroke
Mercury 1995-98
O.E. No. 50-825991A2

Part No. PH130-0015
Mercury/Mariner
1976-1994, 50-70 hp Engines
Replaces O.E. No. 50-44369A1

Part No. PH130-0019
Mercury/Mariner
100-115 hp 4 Cylinder Engines
Replaces O.E. No. 50-66015-1, 50-66015-3, 8th Drive

Part No. PH130-0020
Mercury
2.0 & 2.4 Liter
V6 Engines
Replaces O.E. No. 50-60594A1

New York • 1-800-222-3375
631-244-8060 • fax 631-244-0556
61 Floyd Run, Bohemia, NY 11716
Puerto Rico
787-832-2499 • fax 787-832-2939
234 Balboa St., Mayaquez, Puerto Rico 00681-2605
e-mail: info@wsmparts.com • www.wsmparts.com

Protorque Starters

Picture Gallery

Part No. PH130-0021
Mercury
6-25 hp Engines
Replaces O.E. No. 50-90983A1

Part No. PH130-0023
Mercury/Mariner
Fits 225-250 hp Engines
Replaces O.E. No. 50-818445,
50-818445-5, 50-818445-2

Part No. PH130-0024
Mercury
1992-1996, 30-40 hp Engines
Replaces O.E. No. 50-822462,
50-822462-1

Part No. PH130-0028
Mercury
Starter for Mercury 1999, 30-40 hp
4 Stroke Engines
Replaces O.E. No. 50-854636

Part No. PH130-0029
Mercury
Starter for Mercury Fits 1998-Up
25 hp 4 Stroke Engines
Replaces O.E. No. 50-830308-1

Part No. PH130-0030
Mercury
Starter for Mercury 1999
3 Liter V6 DFI Engines
Replaces O.E. No. 50-833153-5

Part No. PH130-0031
Mercury
1997-1999, Sport Jet V6
Replaces O.E. No. 50-832997,
50-832997-2

Part No. PH130-0033
Fits 40, 50, 60 hp, 4 Cyl., 4 Stroke
Mercury 40, 50, 60 hp 2001-09
Mariner 50, 60 hp 2001
O.E. No. 50-859377T, 50-884044T,
50-888161

Part No. PH130-0034
Fits 8, 9.9, 13.5, 15 hp, 4 Stroke
Mercury 1998-2001
Mariner 1998-2009
O.E. No. 50-852570T, 50-859168,
50-859168T

PRECISION
Arizona • 1-800-977-1414
480-966-1550 • fax 480-966-1565
16441 N. 91St. Suite 105 Scottsdale, AZ 85260
Florida • 1-866-417-4072
941-238-0960 • fax 941-238-0965
1899 60th Place East, Bradenton, FL 34203
e-mail: info@wsmparts.com • www.wsmparts.com

Protorque Starters

Picture Gallery

Part No. PH130-0037
Fits 115, 150, 175 hp
Mercury 1973-88
Mariner 1979-88
O.E. No. 50-64975

Part No. PH130-0040
Mercury
1960-1985
40-50 hp 400-402 Engines
Replaces O.E. No. 50-38890A1, 50-55601A2, 50-55601

Part No. PH130-0041
Mercury/Mariner
1977-1994, 75-90 hp & 1986-1988, 80 hp 3 & 4 Cylinder Engines
Replaces O.E. No. 50-65436, 50-66015, 10th Drive

Part No. PH130-0042
Mercury
1976-1988
90-175 hp Inline, 150 hp Engines
10 Tooth
Replaces O.E. No. 50-57465A1, 50-72467

Part No. PH130-0046
Mercury
1975-1994, 200-275 hp Large V6 Engines
105 Jet & 140 Jet
Replaces O.E. No. 50-44414, 50-79472

Part No. PH130-0047
Mercury
70-150 hp 9 Tooth Sport Jet
O.E. No. 50-819085T

Part No. PH130-0049
Fits 25, 30, 40 hp, 4 Cyl., 2 Stroke
Mercury 1987-90
Mariner 1980-90
O.E. No. 50-814980M, 50-96359M, 50-97693M

Part No. PH130-0055
Fits 75-90 hp, 4 Stroke
Mercury 2000-05
Mariner 2000-01
O.E. No. 50-804312T1

Part No. PH130-0057
Fits Mercury 75-115 hp 4 Stroke
2001-09
O.E. No. 50-881368T, 50-881368T1, 50-881368T2, 50-881368T1

New York • 1-800-222-3375
631-244-8060 • fax 631-244-0556
61 Floyd Run, Bohemia, NY 11716
Puerto Rico
787-832-2499 • fax 787-832-2939
234 Balboa St., Mayaquez, Puerto Rico 00681-2605
e-mail: info@wsmparts.com • www.wsmparts.com

Protorque Starters

Picture Gallery

Part No. PH130-0066
Mercury
Verado Sport Jet DFI
O.E. No. 50-853329T & 892339T01

Part No. PH130-0067
Fits 150-225 hp Engines with 135 Tooth Flywheel
Mercury 1978-88
Mariner 1980-88
O.E. No. 50-86976

Part No. PH130-0072
Fits Mercury 35-40 hp 1980-87
9 Tooth
O.E. No. 50-41583

Part No. PH130-0074
Mercury
225 hp 4 Stroke
(Alignment Pins Comes Out Left Side)
O.E. No. 888333T1

Part No. PH130-0081
Mercury
Fits: 40-50Hp 4 Stroke
1997-2000
O.E. No. 50-834749

Com-End Kits

Part No. PH365-0008
STARTER BRUSH LOADING TOOL

Part No. BR-36S
STARTER BRUSH KIT
Fits: Most Starters except Prestolite

Part No. PH185-0001
MERCURY
Fits (PH130-0012, PH130-0043, PH130-0044, PH130-0045)
Replaces O.E. No. 5703640

Part No. PH185-0004
MERCURY
Fits (PH130-0041, PH130-0042, PH130-0046, PH130-0019, PH130-0020)
Replaces O.E. No. 4823040

PRECISION
Arizona • 1-800-977-1414
480-966-1550 • fax 480-966-1565
16441 N. 91St. Suite 105 Scottsdale, AZ 85260
Florida • 1-866-417-4072
941-238-0960 • fax 941-238-0965
1899 60th Place East, Bradenton, FL 34203
e-mail: info@wsmparts.com • www.wsmparts.com

Protorque Solenoids & Relays

Part No. PH375-0011
OE No. 25661, 256611, 25661T1

Part No. PH375-0012
OE No. 47886, 47886T

Part No. PH375-0027
OE No. 89-76416A1

Part No. PH375-0028
89-68258A4, 89-853654A1, 89-76545

Part No. PH375-0031
12V Grounded Base
OE No. 65057A1

Part No. PH375-0034
OE No. 89-818997A1, 89-818997T1

Part No. PH375-0035
OE No. 89-818864, 89-818864T

Part No. PH375-0036
OE No. 89-918999A2, 89-825842A1, 89-850188T1

Part No. PH375-0037
OE No. 89-817109A2

Part No. PH375-0038
OE No. 89-96054, 89-96054T, 89-91975 Flat Bracket

Part No. PH375-0039
OE No. 89-96158, 89-96158T Vertical Post

Part No. PH375-0041
OE No. 89-825096T
Fits: 9.9/15 (4 stroke) (99 & up), 30 (4 stroke) (02 & up) 40/50/60 (4 stroke)(01 & up), 75/90 (4 stroke) (00 & up)

Part No. PH360-0006
OE No. 87-18211

Part No.PH360-0002
OE No. 87-19761

Part No. PH360-0008
OE No. 882751A1 Relay

Part No. PH365-0003
OE No. 88-79023A10 Fuse Assembly 110 AMP

New York • 1-800-222-3375
631-244-8060 • fax 631-244-0556
61 Floyd Run, Bohemia, NY 11716
Puerto Rico
787-832-2499 • fax 787-832-2939
234 Balboa St., Mayaquez, Puerto Rico 00681-2605
e-mail: info@wsmparts.com • www.wsmparts.com

Protorque Trim Motors

Mercury/Mercruiser/Early Volvo Penta 3 Wire
O.E. No.: 76395A2
Part No. PH200-T026

35-220 hp 1985-1992 3 Ram Fits Side Fill Reservoir
Part No. PH200-T011-R

Motor Kit For #99186 Fits Side Fill Reservoir Only, Replaces Square Eaton Motor Only
Part No. PH200-T001

Wiring Harness With Relays Converts 3 Wire Systems To 2 Wire
Part No. PH200-WH01

3 Ram 2 Wire With Harness Fits AFT Fill Reservoir Only
O.E. No.: 811628
Part No. PH200-T032

2 Wire 1996 & Up Fits AFT Fill Reservoir Only
O.E. No.: 828708, 878265A1, A4
Part No. PH200-T010

Part No. PH200-T016-K
Replacement Tilt Trim Motor
OE No. 18183A12, 14336A8, 14336A9
W/Metal Bracket

Part No. PH200-T016-SK
OE No. 18183A12, 14336A8, 14336A9.
Replacement Tilt Trim Motor, Mercruiser Applications /Stainless Steel Bracket

PRECISION
Arizona • 1-800-977-1414
480-966-1550 • fax 480-966-1565
16441 N. 91St. Suite 105 Scottsdale, AZ 85260
Florida • 1-866-417-4072
941-238-0960 • fax 941-238-0965
1899 60th Place East, Bradenton, FL 34203
e-mail: info@wsmparts.com • www.wsmparts.com

Protorque Trim Motors

Part No. PH200-T033
Single Ram Replaces 3 Wire
Motor With 4 Bolt Mount
O.E. No.: 824051

Part No. PH200-T003
Single Ram Systems 2 Wire 4 Bolt
O.E. No.: 893907A2 & 813447

Part No. PH200-T002
Late Model 25-50 hp
O.E. No.: 827675A1

Part No. PH200-T016
Motor And Reservoir
O.E. No.: 18183A12, 14336A8

Part No. PH200-T008
225-275 hp
O.E. No.: 92459A4
Unit Has 3.5" Reservoir

Part No. PH200-T063
Mercury/Mercruiser
3 Wire With 5" Reservoir
O.E. No.: 818161A 2

Part No. PH200-T015
Mercury Three Wire Trim Motor
Without Reservoir
O.E. No. 17649A1

New York • 1-800-222-3375
631-244-8060 • fax 631-244-0556
61 Floyd Run, Bohemia, NY 11716
Puerto Rico
787-832-2499 • fax 787-832-2939
234 Balboa St., Mayaquez, Puerto Rico 00681-2605
e-mail: info@wsmparts.com • www.wsmparts.com

Protorque Trim Motors

Part No. PH200-T065
Powder Coated Steel Replacement T/T Bracket
O.E. No.: 42419A1

Part No. PH200-T065-K
Powder Coated Steel Replacement T/T Bracket Complete with Solenoids, Wiring Harness, Fuse, and OE Style Plug

Part No. PH200-T066-K
Stainless Steel Replacement T/T Bracket Complete with Solenoids, Wiring Harness, Fuse, and OE Style Plug

Part No. PH200-T066
Stainlees Steel Bracket Only
OE No. 42419A1

Part No. PH200-T067
Stainless Steel Bracket for Late Style Mercury
O.E. No.: 862548A1

Part No. PH200-T019-SK
Replacement T/T Motor for Late Mercury with Oildyne Style Pump and Reservoir, Low Profile Stainless Steel Bracket. With Solenoids, Wiring Harness, Fuse, and OE Style Plug. Unit Equipped with Quick Connect Fittings
O.E. No. 14336A28

Part No. PH200-T064-1B
Mercury, Complete 1 Bolt Type Oil Reservoir. Includes: Gasket, Bolt Screen, Seal and Cap. Fits Older Style PH200-T016 and PH200-T017
O.E. No, 118525A1

Part No. PH200-T064-4B
Mercury, Complete 4 Bolt Type Oil Reservoir. Includes: Gasket, Screws Screen, Seal and Cap. Fits Late Style Oildyne T/T Motors
O.E. No.: 88316A1

Part No. PH200-T011
Cartride Pump and Motor (Complete) to Replace Mercury/Marner 35-220 hp and Magnum II Outboards. With (Design 1) 3 Ram, 3 Wire Trim Units 1985-92. Replaces Square Style Eaton
O.E. No's. 99186, 99186T, 99186-I

PRECISION
Arizona • 1-800-977-1414
480-966-1550 • fax 480-966-1565
16441 N. 91St. Suite 105 Scottsdale, AZ 85260
Florida • 1-866-417-4072
941-238-0960 • fax 941-238-0965
1899 60th Place East, Bradenton, FL 34203
e-mail: info@wsmparts.com • www.wsmparts.com

Ignition Coils

Ignition Coil
Part No. 376-5186
O.E. No.339-832757A4

Application Guide

hp Model	Comments	Beginning Serial No.	Ending Serial No.	Part No.	Qty.
6		A197112	& UP	**376-5186**	2
8		A197112	& UP	**376-5186**	2
210 c.c.	Sail Power	A918999	& UP	**376-5186**	2
9.9		A197112	& UP	**376-5186**	2
15		8292414	& UP	**376-5186**	2
18		5705532	5837436	**376-5186**	2
18		5837437	6443972	**376-5186**	2
18		6443973	8238463	**376-5186**	2
20		6443973	8238463	**376-5186**	2
20		8238464	G760299	**376-5186**	2
25		5705532	6443972	**376-5186**	2
25		6443973	8238463	**376-5186**	2
25		8238464	G760299	**376-5186**	2
25		8238464	G760299	**376-5186**	2
30	Jet	C159200	G589999	**376-5186**	2
35		6445653	8110788	**376-5186**	2
35		8110789	& UP	**376-5186**	2
40	2 Cyl.	5823918	& UP	**376-5186**	2
40	4 Cyl.	C159200	G589999	**376-5186**	4
45/50	4 Cyl.	5531630	& UP	**376-5186**	4
50/60	3 Cyl.	6428681	D000749	**376-5186**	3
50/55/60	3 Cyl.	D000750	G589999	**376-5186**	3
70	Mariner	5128280	& Up	**376-5186**	3
70		5579016	6428680	**376-5186**	3
70 / 75	3 Cyl.	C272000	D283221	**376-5186**	3
75	4 Cyl.	6432901	& Up	**376-5186**	4
80	4 Cyl. All	5144547	& UP	**376-5186**	4
90	6 Cyl.	5299506	& UP	**376-5186**	6
90	3 Cyl.	A996142	283221	**376-5186**	3
90	3 Cyl.	D283222	G437999	**376-5186**	3
100	4 Cyl.	B209468	6437999	**376-5186**	4
105	Jet	82000	G303045	**376-5186**	6
115	6 Cyl.	5314656	& UP	**376-5186**	6
115	4 Cyl.	B209468	6437999	**376-5186**	4
7125	4 Cyl.	283222	G437999	**376-5186**	4
V-135		A904646	& UP	**376-5186**	6
140		5327663	& UP	**376-5186**	6
140	Jet	82000	G960499	**376-5186**	6
V-150		5129480	G960499	**376-5186**	6
V-150	XR2	6616991	A904645	**376-5186**	6
XR-4, Magnum II		8242885	D819999	**376-5186**	6
V-150	XR6	D820000	G960499	**376-5186**	6
V-175	EFI, XR1	5180109	G960499	**376-5186**	6
V-200	XR1	5158929	G960499	**376-5186**	6
V-220		8117316	& UP	**376-5186**	6
V-225		5628028	& UP	**376-5186**	6

New York • 1-800-222-3375
631-244-8060 • fax 631-244-0556
61 Floyd Run, Bohemia, NY 11716
Puerto Rico
787-832-2499 • fax 787-832-2939
234 Balboa St., Mayaquez, Puerto Rico 00681-2605
e-mail: info@wsmparts.com • www.wsmparts.com

Spark Plug Wires

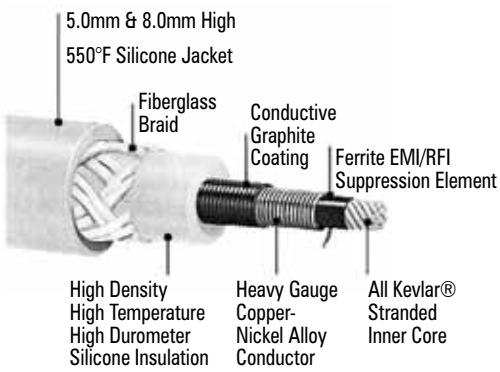

Part No.	O.E. No.
368-200-05	5" wire
368-200-07	7" wire 84-821945A56
368-200-09	9" wire 84-813715A1
368-7124	Fits: CDM 84-821945A61 coils
368-7126	Fits: CDM 84-821945T65 & 84-821945T74 coils

368-200-09

25ft Plug Wire Kit
Part No. 368-400-25

Plug Wire Terminal, Brass (10 Pack)
Part No. 370-100

Plug Wire Terminal, Stainless (10 Pack))
Part No. 370-110

Part No. 369-100
Inline Spark Plug Boot

Part No. 369-110
90° Spark Plug Boot, Black

Part No. 369-120
90° Spark Plug Boot, Black

PRECISION
Arizona • 1-800-977-1414
480-966-1550 • fax 480-966-1565
16441 N. 91St. Suite 105 Scottsdale, AZ 85260
Florida • 1-866-417-4072
941-238-0960 • fax 941-238-0965
1899 60th Place East, Bradenton, FL 34203
e-mail: info@wsmparts.com • www.wsmparts.com

WSM Switch Boxes

Part No. 361-7452K1
O.E. No. 339-7452A15
Fits 6-35 hp

Part No. 361-4952A30
O.E. No. 18495A9
Fits: 20 hp 94-98

Part No. 361-5713
O.E. No. 855713A3, A4
Fits: 20-25 hp Commercial 98-06
Serial # OG760300 – OT979999

Part No. 361-5772
O.E. No. 332-5772A5
Fits: 40-125 hp

Part No. 361-4953
O.E. No. 18495A10, A12, A19, A26
Fits: 65-95 hp 94-97,

Part No. 361-4953-32
O.E. No. 18495A32
Fits 175 hp XR-2 Sport Jet 97-99
Serial # OE151580 – OE433133

Part No. 361-9052
O.E. No. 19052A1,A6
Fits: 3 Cyl.

WSM Stators

Part No. 363-6617K1
O.E. No. 86617A20
Fits: 6-25 hp

Part No. 363-2075K2
O.E. No. 3980832075A4
Fits: 30-125 hp

Part No. 363-5255
O.E. No. 398-5255
Fits: 40 hp 2 Cylinder

Part No. 363-5704A7
O.E. No. 398-5704A7
Fits: 50-70 hp

New York • 1-800-222-3375
631-244-8060 • fax 631-244-0556
61 Floyd Run, Bohemia, NY 11716
Puerto Rico
787-832-2499 • fax 787-832-2939
234 Balboa St., Mayaquez, Puerto Rico 00681-2605
e-mail: info@wsmparts.com • www.wsmparts.com

WSM Stators

Part No. 363-5454A26
O.E. No. 398-5454A26
Fits: 75-85 hp 4 Cylinder

9 Amp
Part No. 363-5456
O.E. No. 398-5151A17
Fits: 90 / 115 / 140 hp

16 Amp
Part No. 363-5456-16
O.E. No. 398-5454A35
Fits: 135/150/175/200/
220 hp

Part No. 363-5454A7
O.E. No. 398-5454A7
Fits: 150-225 hp

Regulators & Rectifiers

REGULATOR
Part No. PH350-0005
O.E. No. 815279A2 , 883072T
Fits: 16 or 40 Amp 1989 & Up

RECTIFIER
Part No. PH350-0006
O.E. No. 883071T1, 883070T02,
893640T01
Fits: 25-60 hp / 135-240 hp

REGULATOR
Part No. 004-283
O.E. No. 881346T
Fits: F50-F115 4 Stroke's

REGULATOR
Part No. 365-1960
O.E. No. 804278-11
Fits: 75-90 hp

RECTIFIER
Part No. PH350-0003
O.E. No. 62351A1,A2, 816770,T
Fits: All Applications with
square 3 post Rectifier

PRECISION
Arizona • 1-800-977-1414
480-966-1550 • fax 480-966-1565
16441 N. 91St. Suite 105 Scottsdale, AZ 85260
Florida • 1-866-417-4072
941-238-0960 • fax 941-238-0965
1899 60th Place East, Bradenton, FL 34203
e-mail: info@wsmparts.com • www.wsmparts.com

Bearings

LOWER MAIN BEARING
Part No. 010-202
Fits: 40-50Hp

LOWER MAIN BEARING
Part No. 010-215
Fits 60-70Hp

LOWER MAIN BEARING
Part No. 010-222-02
Fits: 90-120Hp

Carburetor Kits

Part No. 600-50
OE No. 346-87122-0

Part No. 600-58
O.E. No. 3C8-87122-2
Fits: MS40-50D

Fuel

OIL FILTER
Part No. 006-563
O.E. No. 3R0076150M
Fits: 9.9-30Hp

FUEL PUMP
Part No. 600-100
O.E. No. 356-04001M

Part No. 600-095
O.E No.803529T06
Fits: 4 Strokes

New York • 1-800-222-3375
631-244-8060 • fax 631-244-0556
61 Floyd Run, Bohemia, NY 11716
Puerto Rico
787-832-2499 • fax 787-832-2939
234 Balboa St., Mayaquez, Puerto Rico 00681-2605
e-mail: info@wsmparts.com • www.wsmparts.com

Thermostat

THERMOSTAT 60 CELSIUS
Part No.775-205
Fits: 8-30 Hp 2002-2014
O.E No. 3R3-01030-0

Impellers

700-345

HP	O.E. No.	Impeller
4-6 2 & 4 Stroke	361-65021-1	**700-345**

Tilt Tube Parts

Tilt Tube Bushing	Inside Diameter	Length
986-200	7/8"	1"

Washer	
986-300	7/8"

Cable Grease Nut	Pitch Thread
986-500	1" x 14
Built in Grease seal with easy steer nuts, it lubricates and seals out moisture and salt water.	
986-505	7/8" x 14
986-510	7/8" X 14
Pitch Threads I.D. or O.D. This nut injects oil directly onto cable.	

Tilt Tube Reamer	Shank Dia.
986-600	3/8"
Specialy ground OD to accommodate most Tilt Tubes. Made of high speed tool steel.	

Tilt Tube Cleaning Brush	
986-605	

Drain Plug Gasket Kits

Part No.	Description	O.E. No.
555-01K	Drain Plug Gasket Assortment Kit Fits: Mercury, J/E, Yamaha, Suzuki, Nissan/Tohatsu	

Note: Kits Included 50 Pieces In Each Kit

Drain Plug Replacement Gaskets

Sold in packs of 50 Pieces

Part No.	Description	O.E. No.
555-11	Johnson Evinrude/Mercury	12-19183 / 307552
555-15	Johnson / Evinrude	311598
555-13	Nissan / Tohstsu	332600060M
555-14	Suzuki	09168-10022
555-12	Volvo	
555-10	Yamaha	90430-08020-00

PRECISION
Arizona • 1-800-977-1414
480-966-1550 • fax 480-966-1565
16441 N. 91St. Suite 105 Scottsdale, AZ 85260
Florida • 1-866-417-4072
941-238-0960 • fax 941-238-0965
1899 60th Place East, Bradenton, FL 34203
e-mail: info@wsmparts.com • www.wsmparts.com

Protorque Starters

Part No. PH130-0006
O.E. No. 3C876010-1
Fits: 15-40 Hp

Part No. PH130-0080
O.E. No. 34676010-0A0
Fits: 2 Cyl. 25-70 Hp

Part. No. PH130-0048
O.E. No. 353-76010-4
Fits: 45-140Hp 9 Tooth

Part. No. PH130-0061
O.E. No. 350-76010-0,
B29A90500A, B29A90500
Fits: 8-18HP

Protorque Trim Motors

Part No. PH200-T057
O.E. No. 3E0-771800
Fits: 4 Bolt 2 Wire

Part No. PH200-T024
2 Wire 3 Bolt
Fits: 40-50 Hp

Protorque Trim Harness with Relay

Part No. PH200-WH01

Spark Plug Wires

25ft Plug Wire Kit
Part No. 368-400-25

Plug Wire Terminal, Brass (10 Pack)
Part No. 370-100

Plug Wire Terminal, Stainless (10 Pack))
Part No. 370-110

90° Spark Plug Boot
Part No. 369-110

90° Spark Plug Boot
Part No. 369-120

New York • 1-800-222-3375
631-244-8060 • fax 631-244-0556
61 Floyd Run, Bohemia, NY 11716
Puerto Rico
787-832-2499 • fax 787-832-2939
234 Balboa St., Mayaquez, Puerto Rico 00681-2605
e-mail: info@wsmparts.com • www.wsmparts.com

Fuel Pumps

Part No. 600-111
Fits:90-175 Hp
O.E No. 15200-90J00,
15200-96J00

Part No. 600-111-01
Fits: F40-F70
O.E. No. 15200-87J00
15200-87J10
15200-99E00

Part No. 600-100
Fits: 25-40Hp 1986-00
O.E No. 15100-94303

Fuel Filters

Part No. 600-289
O.E No. 15410-93411
Fits: DT25-DT40

Part No. 600-290
Replaces OE
No. 15412-93J00

Part No. 600-311
O.E No. 15410-87J30
Fits: DF25 DF70-DF140
2006 & Newer

For More Fuel Items See the Universal Section

Oil Filters

Part No. 615-140
Fits: DF25-DF70
O.E. No 16510-87J00

Part No. 615-130
Fits: DF90-115 Hp All
DF70 2009-2014
O.E. No 16510-61A20

Part No. 615-135
Fits: DF140
O.E. No 16510-82703

Part No. 615-150
Fits: DF200, 225, 250
Before 2007
O.E. No 16510-93J00

Part No. 615-155
Fits: DF150-DF300
O.E. No. 16510-96J00

PRECISION
Arizona • 1-800-977-1414
480-966-1550 • fax 480-966-1565
16441 N. 91St. Suite 105 Scottsdale, AZ 85260
Florida • 1-866-417-4072
941-238-0960 • fax 941-238-0965
1899 60th Place East, Bradenton, FL 34203
e-mail: info@wsmparts.com • www.wsmparts.com

Protoque Starters

Part No. PH130-0006
Replacement Starter for Suzuki 40 HP and Various Other Engines Replaces O.E. No. S108-94, S108-112

Part No. PH130-0079
Fits: DF60-DF70 1998-2010
O.E. No 31100-87J00

Part No. PH130-0077
Fits: DF25 2006-2009
O.E. No. 31100-95J00, 95J01

Part No. PH130-0060
Fits: DT75 & DT85 1988-2000
O.E. No 31100-95601, 31100-95310

Part No. PH130-0052
Fits: DT150-DT225 1998-03
O.E. No 31100-87D00, 31100-92E00

Part No. PH130-0053
Fits: DT115 & DT140 1986-2001
O.E. No 31100-94601, 31100-94610

Part No. PH130-0071
Fit: DF90-DF140 2001-2011
O.E. No 31100-90J00

Part No. PH130-0078
Fits: DF150-DF300 2004-Up
DF70-DF90 2009-2010
O.E. No. 31100-93J00,
31100-96J00,J01

Part No. PH130-0007
Fits: DT50-DT65 1970-1983
O.E. No. 31100-95240, 311-95243

New York • 1-800-222-3375
631-244-8060 • fax 631-244-0556
61 Floyd Run, Bohemia, NY 11716

Puerto Rico
787-832-2499 • fax 787-832-2939
234 Balboa St., Mayaquez, Puerto Rico 00681-2605

e-mail: info@wsmparts.com • www.wsmparts.com

Spark Plug Wires

25ft Plug Wire Kit
Part No. 368-400-25

Plug Wire Terminal, Brass (10 Pack)
Part No. 370-100

Plug Wire Terminal, Stainless (10 Pack))
Part No. 370-110

90° Spark Plug Boot
Part No. 369-110

90° Spark Plug Boot
Part No. 369-120

Protorque Trim Motors

Suzuki 2 Wire 4 Bolt
O.E. No.:38100-92J02, 38100-96J00
Fits: DF60-DF300 2001-2007
Part No. PH200-T071

Suzuki 2 Wire 4 Bolt
O.E No. 38100-87J11
Fits DF40 & DF50 2001-Up
Part No. PH200-T046

Suzuki 2 Wire 4 Bolt
O.E. No. 38100-87J00-OEP
Fits: DF40 & DF50 1999-00
Part No. PH200-T070

Suzuki V4/V6 1986-1990 3 Wire 3 Bolt
O.E. No.: 38100-87E10-OED
Part No. PH200-T025

Suzuki V4/V6 1990-2003
O.E. No.: 38100-92EOO-OED
Part No. PH200-T024

PRECISION
Arizona • 1-800-977-1414
480-966-1550 • fax 480-966-1565
16441 N. 91St. Suite 105 Scottsdale, AZ 85260
Florida • 1-866-417-4072
941-238-0960 • fax 941-238-0965
1899 60th Place East, Bradenton, FL 34203
e-mail: info@wsmparts.com • www.wsmparts.com

Protorque Trim Relays

Part No. PH200-WH01
Trim Motor Wiring Harness
With Relays

Part No. PH375-0047
O.E. No.: 38410-94552

Thermostat

Part No. 775-220
O.E. No. 17670-90J00
Fits: DF90 thru DF300 2001 & Up

Adapter

Suzuki Pressure & Vacuum
Tester/ Gearcase Filler
995-120 10mm Suzuki Adapter

New York • 1-800-222-3375
631-244-8060 • fax 631-244-0556
61 Floyd Run, Bohemia, NY 11716
Puerto Rico
787-832-2499 • fax 787-832-2939
234 Balboa St., Mayaquez, Puerto Rico 00681-2605
e-mail: info@wsmparts.com • www.wsmparts.com

Tilt Tube Parts

986-200

986-300

986-500

986-505

986-510

986-600

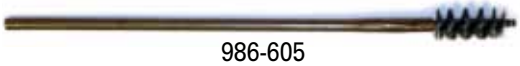
986-605

Tilt Tube Bushing	Inside Diameter	Length
986-200	7/8"	1"

Washer	
986-300	7/8"

Cable Grease Nut	Pitch Thread
986-500	1" x 14

Built in Grease seal with easy steer nuts, it lubricates and seals out moisture and salt water.

986-505	7/8" x 14
986-510	7/8" X 14

Pitch Threads I.D. or O.D. This nut injects oil directly onto cable.

Tilt Tube Reamer	Shank Dia.
986-600	3/8"

Specialy ground OD to accommodate most Tilt Tubes. Made of high speed tool steel.

Tilt Tube Cleaning Brush
986-605

Drain Plug Gasket Kits

Part No.	Description	O.E. No.
555-01K	Drain Plug Gasket Assortment Kit Fits: Mercury, J/E, Yamaha, Suzuki, Nissan/Tohatsu	

Note: Kits Included 50 Pieces In Each Kit

Drain Plug Replacement Gaskets

Sold in packs of 50 Pieces

Part No.	Description	O.E. No.
555-11	Johnson Evinrude/Mercury	12-19183 / 307552
555-15	Johnson / Evinrude	311598
555-13	Nissan / Tohstsu	332600060M
555-14	Suzuki	09168-10022
555-12	Volvo	
555-10	Yamaha	90430-08020-00

PRECISION
Arizona • 1-800-977-1414
480-966-1550 • fax 480-966-1565
16441 N. 91St. Suite 105 Scottsdale, AZ 85260
Florida • 1-866-417-4072
941-238-0960 • fax 941-238-0965
1899 60th Place East, Bradenton, FL 34203
e-mail: info@wsmparts.com • www.wsmparts.com
VISA MasterCard AMERICAN EXPRESS DISCOVER NOVUS

Re-Build Kits

One convenient part number gives you everything you need.

WSM rebuild kits come complete with all parts needed to rebuild your engine

Kits include:

- WSM pistons complete with Japanese rings, pins, and clips
- Highest quality Gaskets available
- Crank bearings, rod bearings, and rod bolts

Horse Power	Year	Kit No.	Bore Size
40 HP	1984-1994	**100-252-10**	STD.
50 HP	1984-1994	**100-252-11**	.010
3 Cyl.		**100-252-12**	.020
		100-252-13	.030
		100-252-14	.040

Kit Includes:

Description	Part No.	Qty.
Piston Kit	**100-252** series	3
Gasket Kit	**500-313**	1
Upper Main Bearings	**010-210-01**	1
Lower Main Bearings	**010-210-01**	1
Upper Rod Bearings	**010-180-30**	3
Lower Rod Bearings	N/A (press crank)	

Horse Power	Year	Kit No.	Bore Size
40 HP	1995 & Up	**100-252-20**	STD.
50 HP	1995 & Up	**100-252-21**	.010
3 Cyl.		**100-252-22**	.020
		100-252-23	.030
		100-252-24	.040

Kit Includes:

Description	Part No.	Qty.
Piston Kit	**100-252** series	3
Gasket Kit	**500-316**	1
Upper Main Bearings	**010-210-01**	1
Lower Main Bearings	**010-210-01**	1
Upper Rod Bearings	**010-180-30**	3
Lower Rod Bearings	N/A (press crank)	

Horse Power	Year	Kit No.	Bore Size
60 HP	1984 & Up	**100-255-10**	STD.
70 HP	1984 & Up	**100-255-11**	.010
3 Cyl.		**100-255-12**	.020
		100-255-13	.030
		100-255-14	.040

Kit Includes:

Description	Part No.	Qty.
Piston Kit	**100-255** series	3
Gasket Kit	**500-330**	1
Upper Main Bearings	**010-295**	1
Center Main Bearings	N/A	
Lower Main Bearings	**010-215**	1
Upper Rod Bearings	**010-181-30**	3
Lower Rod Bearings	N/A (press crank)	

Horse Power	Year	Kit No.	Bore Size
75 85 90 HP		**100-265-10**	STD.
3 Cyl.		**100-265-11**	.010
		100-265-12	.020
		100-265-13	.030
		100-265-14	.040

Kit Includes:

Description	Part No.	Qty.
Piston Kit	**100-265** series	3
Gasket Kit	**500-335**	1
Upper Main Bearings	**010-295-05**	1
Center Main Bearings	**010-295-12**	2
Lower Main Bearings	**010-295-02**	1
Upper Rod Bearings	**010-162**	3
Lower Rod Bearings	**010-164**	3
Rod Bolts	**805-300**	6

New York • 1-800-222-3375
631-244-8060 • fax 631-244-0556
61 Floyd Run, Bohemia, NY 11716

Puerto Rico
787-832-2499 • fax 787-832-2939
234 Balboa St., Mayaquez, Puerto Rico 00681-2605

e-mail: info@wsmparts.com • www.wsmparts.com

Re-Build Kits

One convenient part number gives you everything you need.

WSM rebuild kits come complete with all parts needed to rebuild your engine

Kits include:

- WSM pistons complete with Japanese rings, pins, and clips
- Highest quality Gaskets available
- Crank bearings, rod bearings, and rod bolts

STANDARD SERIES

Horse Power	Year	Kit No.	Bore Size
115 HP	1989-1992	**100-270-10**	STD.
130 HP	1984-1992	**100-270-11**	.010
V4		**100-270-12**	.020
21.5mm Wrist Pin		**100-270-13**	.030
Fits 6E5 Rod		**100-270-14**	.040

Kit Includes:

Description	Part No.	Qty.
Piston Kit	**100-270** (PS)	4
Gasket Kit	**500-340**	1
Upper Main Bearings	**010-295-10**	1
Center Main Bearings	**010-295-13**	2
Lower Main Bearings	**010-222-02**	1
Upper Rod Bearings	**010-162**	4
Lower Rod Bearings	**010-165**	4
Rod Bolts	**805-300**	8

PLATINUM SERIES (M0S2 COATED)

Horse Power	Year	Kit No.	Bore Size
115 HP	1989-1992	**100-270-10P**	STD.
130 HP	1984-1992	**100-270-11P**	.010
V4		**100-270-12P**	.020
21.5mm Wrist Pin		**100-270-13P**	.030
Fits 6E5 Rod		**100-270-14P**	.040

Kit Includes:

Description	Part No.	Qty.
Piston Kit	**100-270**(PP/SP)	4
Gasket Kit	**500-340**	1
Upper Main Bearings	**010-295-10**	1
Center Main Bearings	**010-295-15**	1
Lower Main Bearings	**010-222-02**	1
Upper Rod Bearings	**010-162**	4
Lower Rod Bearings	**010-165**	4
Rod Bolts	**805-300**	8

STANDARD SERIES

Horse Power	Year	Kit No.	Bore Size
V4 with	1993-Up	**100-275-10**	STD.
Fits 6R5 Rod		**100-275-11**	.010
23mm wrist pin		**100-275-12**	.020
		100-275-13	.030
		100-275-14	.040

Kit Includes:

Description	Part No.	Qty.
Piston Kit	**100-275** (PS)	4
Gasket Kit	**500-340**	1
Upper Main Bearings	**010-295-10**	1
Center Main Bearings	**010-295-15**	1
Lower Main Bearings	**010-222-02**	1
Upper Rod Bearings	**010-160**	4
Lower Rod Bearings	**010-165**	4
Rod Bolts	**805-300**	8

PLATINUM SERIES (M0S2 COATED)

Horse Power	Year	Kit No.	Bore Size
V4 with	1993-Up	**100-275-10P**	STD.
Fits 6R5 Rod		**100-275-11P**	.010
23mm wrist pin		**100-275-12P**	.020
		100-275-13P	.030
		100-275-14P	.040

Kit Includes:

Description	Part No.	Qty.
Piston Kit	**100-275**(PP/SP)	4
Gasket Kit	**500-340**	1
Upper Main Bearings	**010-295-10**	1
Center Main Bearings	**010-295-15**	1
Lower Main Bearings	**010-222-02**	1
Upper Rod Bearings	**010-160**	4
Lower Rod Bearings	**010-165**	4
Rod Bolts	**805-300**	8

PRECISION
Arizona • 1-800-977-1414
480-966-1550 • fax 480-966-1565
16441 N. 91St. Suite 105 Scottsdale, AZ 85260
Florida • 1-866-417-4072
941-238-0960 • fax 941-238-0965
1899 60th Place East, Bradenton, FL 34203
e-mail: info@wsmparts.com • www.wsmparts.com

Re-Build Kits

One convenient part number gives you everything you need.

WSM rebuild kits come complete with all parts needed to rebuild your engine

Kits include:

- WSM pistons complete with Japanese rings, pins, and clips
- Highest quality Gaskets available
- Crank bearings, rod bearings, and rod bolts

STANDARD SERIES

Horse Power Year	Kit No.	Bore Size
V-6 90 degree Carbureted with Vertical Reeds and 6E5 Rod	**100-270-20**	STD.
	100-270-21	.010
	100-270-22	.020
	100-270-23	.030
	100-270-24	.040

Kit Includes:

Description	Part No.	Qty.
Piston Kit	**100-270** (PS)	6
Gasket Kit	**500-345**	1
Upper Main Bearings	**010-295-10**	1
Center Main Bearings	**010-295-15**	2
Lower Main Bearings	**010-222-02**	1
Upper Rod Bearings	**010-162**	6
Lower Rod Bearings	**010-165**	6
Rod Bolts	**805-300**	12

STANDARD SERIES

Horse Power Year	Kit No.	Bore Size
V-6 90 degree Carbureted with Horizontal Reeds and 6E5 Rod	**100-270-30**	STD.
	100-270-31	.010
	100-270-32	.020
	100-270-33	.030
	100-270-34	.040

Kit Includes:

Description	Part No.	Qty.
Piston Kit	**100-270** (PS)	6
Gasket Kit	**500-347**	1
Upper Main Bearings	**010-295-10**	1
Center Main Bearings	**010-295-15**	2
Lower Main Bearings	**010-222-02**	1
Upper Rod Bearings	**010-162**	6
Lower Rod Bearings	**010-165**	6
Rod Bolts	**805-300**	12

PLATINUM SERIES (M0S2 COATED)

Horse Power Year	Kit No.	Bore Size
V-6 90 degree Carbureted with Vertical Reeds and 6E5 Rod	**100-270-20P**	STD.
	100-270-21P	.010
	100-270-22P	.020
	100-270-23P	.030
	100-270-24P	.040

Kit Includes:

Description	Part No.	Qty.
Piston Kit	**100-270** (PP/SP)	6
Gasket Kit	**500-345**	1
Upper Main Bearings	**010-295-10**	1
Center Main Bearings	**010-295-15**	2
Lower Main Bearings	**010-222-02**	1
Upper Rod Bearings	**010-162**	6
Lower Rod Bearings	**010-165**	6
Rod Bolts	**805-300**	12

PLATINUM SERIES (M0S2 COATED)

Horse Power Year	Kit No.	Bore Size
V-6 90 degree Carbureted with Horizontal Reeds and 6E5 Rod	**100-270-30P**	STD.
	100-270-31P	.010
	100-270-32P	.020
	100-270-33P	.030
	100-270-34P	.040

Kit Includes:

Description	Part No.	Qty.
Piston Kit	**100-270** (PP/SP)	6
Gasket Kit	**500-347**	1
Upper Main Bearings	**010-295-10**	1
Center Main Bearings	**010-295-15**	2
Lower Main Bearings	**010-222-02**	1
Upper Rod Bearings	**010-162**	6
Lower Rod Bearings	**010-165**	6
Rod Bolts	**805-300**	12

New York • 1-800-222-3375
631-244-8060 • fax 631-244-0556
61 Floyd Run, Bohemia, NY 11716

Puerto Rico
787-832-2499 • fax 787-832-2939
234 Balboa St., Mayaquez, Puerto Rico 00681-2605

e-mail: info@wsmparts.com • www.wsmparts.com

Re-Build Kits

One convenient part number gives you everything you need.

WSM rebuild kits come complete with all parts needed to rebuild your engine

Kits include:

- WSM pistons complete with Japanese rings, pins, and clips
- Highest quality Gaskets available
- Crank bearings, rod bearings, and rod bolts

STANDARD SERIES

Horse Power	Year	Kit No.	Bore Size
V-6 90 degree Carbureted with Vertical Reeds and 6R5 Rod		**100-275-20**	STD.
		100-275-21	.010
		100-275-22	.020
		100-275-23	.030
		100-275-24	.040

Kit Includes:

Description	Part No.	Qty.
Piston Kit	**100-275** (PS)	6
Gasket Kit	**500-345**	1
Upper Main Bearings	**010-295-10**	1
Center Main Bearings	**010-295-15**	2
Lower Main Bearings	**010-222-02**	1
Upper Rod Bearings	**010-160**	6
Lower Rod Bearings	**010-165**	6
Rod Bolts	**805-300**	12

PLATINUM SERIES (M0S2 COATED)

Horse Power	Year	Kit No.	Bore Size
V-6 90 degree Carbureted with Vertical Reeds and 6R5 Rod		**100-275-20P**	STD.
		100-275-21P	.010
		100-275-22P	.020
		100-275-23P	.030
		100-275-24P	.040

Kit Includes:

Description	Part No.	Qty.
Piston Kit	**100-275** (PP/SP)	6
Gasket Kit	**500-345**	1
Upper Main Bearings	**010-295-10**	1
Center Main Bearings	**010-295-15**	2
Lower Main Bearings	**010-222-02**	1
Upper Rod Bearings	**010-160**	6
Lower Rod Bearings	**010-165**	6
Rod Bolts	**805-300**	12

STANDARD SERIES

Horse Power	Year	Kit No.	Bore Size
V-6 90 degree Carbureted with Horizontal Reeds and 6R5 Rod		**100-275-30**	STD.
		100-275-31	.010
		100-275-32	.020
		100-275-33	.030
		100-275-34	.040

Kit Includes:

Description	Part No.	Qty.
Piston Kit	**100-275** (PS)	6
Gasket Kit	**500-347**	1
Upper Main Bearings	**010-295-10**	1
Center Main Bearings	**010-295-15**	2
Lower Main Bearings	**010-222-02**	1
Upper Rod Bearings	**010-160**	6
Lower Rod Bearings	**010-165**	6
Rod Bolts	**805-300**	12

PLATINUM SERIES (M0S2 COATED)

Horse Power	Year	Kit No.	Bore Size
V-6 90 degree Carbureted with Horizontal Reeds and 6R5 Rod		**100-275-30P**	STD.
		100-275-31P	.010
		100-275-32P	.020
		100-275-33P	.030
		100-275-34P	.040

Kit Includes:

Description	Part No.	Qty.
Piston Kit	**100-275** (PP/SP)	6
Gasket Kit	**500-347**	1
Upper Main Bearings	**010-295-10**	1
Center Main Bearings	**010-295-15**	2
Lower Main Bearings	**010-222-02**	1
Upper Rod Bearings	**010-160**	6
Lower Rod Bearings	**010-165**	6
Rod Bolts	**805-300**	12

PRECISION
Arizona • 1-800-977-1414
480-966-1550 • fax 480-966-1565
16441 N. 91St. Suite 105 Scottsdale, AZ 85260
Florida • 1-866-417-4072
941-238-0960 • fax 941-238-0965
1899 60th Place East, Bradenton, FL 34203
e-mail: info@wsmparts.com • www.wsmparts.com

Re-Build Kits

One convenient part number gives you everything you need.

WSM rebuild kits come complete with all parts needed to rebuild your engine

Kits include:
- WSM pistons complete with Japanese rings, pins, and clips
- Highest quality Gaskets available
- Crank bearings, rod bearings, and rod bolts

STANDARD SERIES

Horse Power	Year	Kit No.	Bore Size
V-6 90 degree EFI with 6R5 Rod		**100-275-40**	STD.
		100-275-41	.010
		100-275-42	.020
		100-275-43	.030
		100-275-44	.040

Kit Includes:

Description	Part No.	Qty.
Piston Kit	**100-275** (PS)	6
Gasket Kit	**500-350**	1
Upper Main Bearings	**010-295-10**	1
Center Main Bearings	**010-295-15**	2
Lower Main Bearings	**010-222-02**	1
Upper Rod Bearings	**010-160**	6
Lower Rod Bearings	**010-165**	6
Rod Bolts	**805-300**	12

PLATINUM SERIES (M0S2 COATED)

Horse Power	Year	Kit No.	Bore Size
V-6 90 degree EFI with 6R5 Rod		**100-275-40P**	STD.
		100-275-41P	.010
		100-275-42P	.020
		100-275-43P	.030
		100-275-44P	.040

Kit Includes:

Description	Part No.	Qty.
Piston Kit	**100-275** (PP/SP)	6
Gasket Kit	**500-350**	1
Upper Main Bearings	**010-295-10**	1
Center Main Bearings	**010-295-15**	2
Lower Main Bearings	**010-222-02**	1
Upper Rod Bearings	**010-160**	6
Lower Rod Bearings	**010-165**	6
Rod Bolts	**805-300**	12

STANDARD SERIES

Horse Power	Year	Kit No.	Bore Size
V6 76 degree Dish Top EFI		**100-285-10**	STD.
		100-285-11	.010
		100-285-12	.020
		100-285-13	.030
		100-285-14	.040

Kit Includes:

Description	Part No.	Qty.
Piston Kit	**100-285** (PS)	6
Gasket Kit	**500-355**	1
Upper Main Bearing	**010-219**	1
Upper Main Bearing	**010-295-01**	1
Center Main Bearings	**010-295-13**	2
Lower Main Bearing	**010-207-05**	1
Upper Rod Bearings	**010-161**	6
Lower Rod Bearings	**010-166**	6
Rod Bolts	**805-310**	12

PLATINUM SERIES (M0S2 COATED)

Horse Power	Year	Kit No.	Bore Size
V6 76 degree Dish Top EFI		**100-285-10P**	STD.
		100-285-11P	.010
		100-285-12P	.020
		100-285-13P	.030
		100-285-14P	.040

Kit Includes:

Description	Part No.	Qty.
Piston Kit	**100-285** (PP/SP)	6
Gasket Kit	**500-355**	1
Upper Main Bearing	**010-219**	1
Upper Main Bearing	**010-295-01**	1
Center Main Bearings	**010-295-13**	2
Lower Main Bearing	**010-207-05**	1
Upper Rod Bearings	**010-161**	6
Lower Rod Bearings	**010-166**	6
Rod Bolts	**805-310**	12

***WSM Tech Tip**

Head Gasket is installed with the wide side of the fire ring towards the block.

New York • 1-800-222-3375
631-244-8060 • fax 631-244-0556
61 Floyd Run, Bohemia, NY 11716

Puerto Rico
787-832-2499 • fax 787-832-2939
234 Balboa St., Mayaquez, Puerto Rico 00681-2605

e-mail: info@wsmparts.com • www.wsmparts.com

Re-Build Kits

One convenient part number gives you everything you need.

WSM rebuild kits come complete with all parts needed to rebuild your engine

Kits include:

- WSM pistons complete with Japanese rings, pins, and clips
- Highest quality Gaskets available
- Crank bearings, rod bearings, and rod bolts

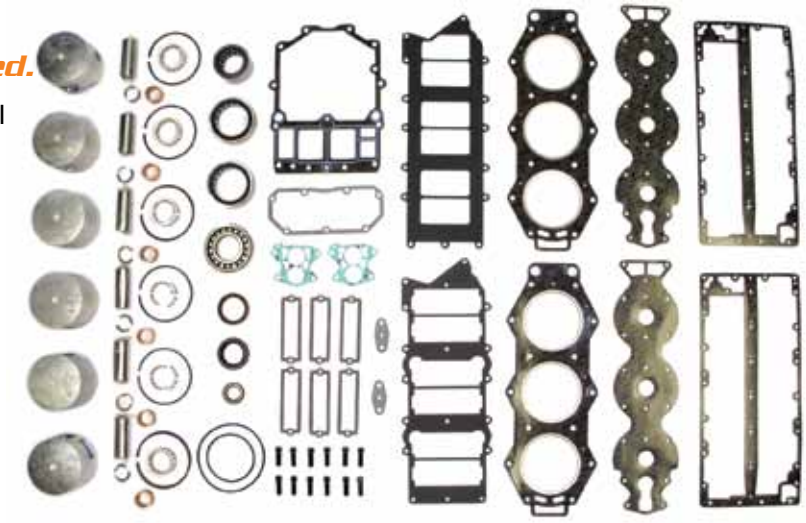

STANDARD SERIES

Horse Power	Year	Kit No.	Bore Size
150/175/200 HP		**100-290-10**	STD.
HPDI 2.6 Liter		**100-290-11**	.010
		100-290-12	.020
		100-290-13	.030
		100-290-14	.040

Kit Includes:

Description	Part No.	Qty.
Piston Kit	**100-290** (PS)	6
Gasket Kit	**500-357**	1
Upper Main Bearings	**010-295-10**	1
Center Main Bearings	**010-295-15**	2
Lower Main Bearings	**010-222-02**	1
Upper Rod Bearings	**010-160**	6
Lower Rod Bearings	**010-165**	6
Rod Bolts	**805-300**	12

PLATINUM SERIES (M0S2 COATED)

Horse Power	Year	Kit No.	Bore Size
150/175/200 HP		**100-290-10P**	STD.
HPDI 2.6 Liter		**100-290-11P**	.010
		100-290-12P	.020
		100-290-13P	.030
		100-290-14P	.040

Kit Includes:

Description	Part No.	Qty.
Piston Kit	**100-290** (PP/SP)	6
Gasket Kit	**500-357**	1
Upper Main Bearings	**010-295-10**	1
Center Main Bearings	**010-295-15**	2
Lower Main Bearings	**010-222-02**	1
Upper Rod Bearings	**010-160**	6
Lower Rod Bearings	**010-165**	6
Rod Bolts	**805-300**	12

PLATINUM SERIES (M0S2 COATED)

Horse Power	Year	Kit No.	Bore Size
3.3 liter		**100-295-10**	STD.
HPDI STD		**100-295-12**	.020
bore 3.661		**100-295-13**	.030
		100-295-14	.040

Kit Includes:

Description	Part No.	Qty.
Piston Kit	**100-295PK**	3
Piston Kit	**100-295SK**	3
Gasket Kit	**500-359**	1
Upper Main Bearings	**010-219**	1
Upper Main Bearings	**010-295-01**	1
Center Main Bearings	**010-295-13**	2
Lower Main Bearing	**010-207-05**	1
Upper Rod Bearings	**010-161**	6
Lower Rod Bearings	**010-166**	6
Rod Bolts	**805-310**	12

PRECISION
Arizona • 1-800-977-1414
480-966-1550 • fax 480-966-1565
16441 N. 91St. Suite 105 Scottsdale, AZ 85260
Florida • 1-866-417-4072
941-238-0960 • fax 941-238-0965
1899 60th Place East, Bradenton, FL 34203
e-mail: info@wsmparts.com • www.wsmparts.com

WSM Pistons

Picture Gallery

YAMAHA 3.228"

Piston: 100-265K
O.E. No. 6H1-11631-03-95

Ring Set: 200-265
O.E. No. 688-11603-A0-00

Wrist Pin: 300-265
O.E. No. 663-11633-00-00

Clips: 400-20
O.E. No. 688-11634-10-00

YAMAHA 2.638"

Piston: 100-250K
O.E. No. 6L2-11631-00-97

Ring Set: 200-250
O.E. No. 6L2-11610-00-00

Wrist Pin: 300-250
O.E. No. 648-11633-00-00

Clips: 400-18
O.E. No. 93450-20026-00

YAMAHA 2.638"

Piston: 100-260K
O.E. No. 6H4-11631-09-96

Ring Set: 200-260
O.E. No. 6H4-11610-00-00

Wrist Pin: 300-250

Clips: 400-18

YAMAHA 2.638"

Piston: 100-252K
O.E. No. 6H4-11631-01-95

Ring Set: 200-252
O.E. No. 63D-11603-00-00

Wrist Pin: 300-250
O.E. No. 648-11633-00-00

Clips: 400-18
O.E. No. 93450-20026-00

YAMAHA 2.834"

Piston: 100-255K
O.E. No. 6H3-11631-01-96

Ring Set: 200-255
O.E. No. 6K5-11601-02-00

Wrist Pin: 300-255
O.E. No. 6H3-11633-00-00

Clips: 400-20
O.E. No. 688-11634-10-00

YAMAHA 3.544"

21.5mm Wrist Pin

Piston: 100-270PK (Port)
O.E. No. 6G5-11642-00-93

Piston: 100-270SK (Starboard)
O.E. No. 6G5-11631-00-93

Ring Set: 200-270
O.E. No. 64D-11603-01-00

Wrist Pin: 300-270
O.E. No. 6K7-11633-00-00

Clips: 400-215
O.E. No. 6E5-11634-00-00

Available in over sizes: .010, .020, .030,. 040. See charts for part numbers.

New York • 1-800-222-3375
631-244-8060 • fax 631-244-0556
61 Floyd Run, Bohemia, NY 11716

Puerto Rico
787-832-2499 • fax 787-832-2939
234 Balboa St., Mayaquez, Puerto Rico 00681-2605

e-mail: info@wsmparts.com • www.wsmparts.com

WSM Pistons

Picture Gallery

YAMAHA 3.544"
21.5mm Wrist Pin
Platinum Series (M0S2) Coated

Piston: 100-270PPK (Port)
O.E. No. 6G5-11642-00-93

Piston: 100-270SPK (Starboard)
O.E. No. 6G5-11631-00-93

Ring Set: 200-270
O.E. No. 64D-11603-01-00

Wrist Pin: 300-270
O.E. No. 6K7-11633-00-00

Clips: 400-215
O.E. No. 6E5-11634-00-00

YAMAHA 3.544"
23mm Wrist Pin

Piston: 100-275PK (Port)
O.E. No. 6R5-11642-11-93

Piston: 100-275SK (Starboard)
O.E. No. 6R5-11631-11-93

Ring Set: 200-270
O.E. No. 64D-11603-01-00

Wrist Pin: 300-275
O.E. No. 6R5-11633-10-00

Clips: 400-23

YAMAHA 3.544
23mm Wrist Pin
Platinum Series(M0S2) Coated

Piston: 100-275PPK (Port)
O.E. No. 6R5-11642-11-93

Piston: 100-275SPK (Starboard)
O.E. No. 6R5-11631-11-93

Set: 200-270
O.E. No. 64D-11603-01-00

Wrist Pin: 300-275
O.E. No. 6R5-11633-10-00

Clips: 400-23

YAMAHA 3.544"
Dish Top Piston 76 degree

Piston: 100-285PK (Port)
O.E. No. 69L-11642-11-93

Piston: 100-285SK (Starboard)
O.E. No. 69L-11631-02-86

Ring Set: 200-270
O.E. No. 64D-11603-01-00

Wrist Pin: 300-280
O.E. No. 61A-11633-02-00

Clips: 400-26
O.E. No. 61A-11634-00-00

YAMAHA 3.544"
Dish Top Piston 76 degree

Piston: 100-285PPK (Port)
O.E. No. 69L-11642-11-93

Piston: 100-285SPK (Starboard)
O.E. No. 69L-11631-02-86

Ring Set: 200-270
O.E. No. 64D-11603-01-00

Wrist Pin: 300-280
O.E. No. 61A-11633-02-00

Clips: 400-26
O.E. No. 61A-11634-00-00

YAMAHA 3.544"
2.6 Liter HPDI

Piston: 100-290PK (Port)
O.E. No. 68F-11642-01-85

Piston: 100-290SK (Starboard)
O.E. No. 68F-11631-01-85

Ring Set: 200-290
O.E. No. 68F-11603-02-00

Wrist Pin: 300-275
O.E. No. 6R5-11633-10-00

Clips: 400-23
O.E. No. 6R5-11634-10-00

Available in over sizes: .010, .020, .030,. 040. See charts for part numbers.

PRECISION
Arizona • 1-800-977-1414
480-966-1550 • fax 480-966-1565
16441 N. 91St. Suite 105 Scottsdale, AZ 85260
Florida • 1-866-417-4072
941-238-0960 • fax 941-238-0965
1899 60th Place East, Bradenton, FL 34203
e-mail: info@wsmparts.com • www.wsmparts.com

WSM Pistons

Picture Gallery

YAMAHA 3.544"

2.6 Liter HPDI
Platinum Series(M0S2) Coated

Piston: 100-290PPK (Port)
O.E. No. 68F-11642-01-85

Piston: 100-290SPK (Starboard)
O.E. No. 68F-11631-01-85

Ring Set: 200-290
O.E. No. 68F-11603-02-00

Wrist Pin: 300-275
O.E. No. 6R5-11633-10-00

Clips: 400-23
O.E. No. 6R5-11634-10-00

YAMAHA 3.661

3.3 Liter HPDI
Platinum Series(M0S2) Coated

Piston: 100-295PK (Port)
O.E. No. 6D0-11642-02-85

Piston: 100-295SK (Starboard)
O.E. No. 6D0-11642-02-85

Ring Set: 200-295
O.E. No. 6D0-11603-00-00
6D0-11603-01-00

Wrist Pin: 300-295
O.E. No. 6D0-11633-00-00

Clips: 400-295
O.E. No. 60X-11634-00-00

Four Stroke Pistons

YAMAHA

4-Stroke
F225 2006-Up, F250, LF250
Platinum Series(M0S2) Coated

Piston: 100-335K
O.E. No. 6P2-11631-01-BO
6P2-11631-01-93

Ring Set: 200-335
O.E. No. 63P-11603-01-00
63P-11603-00-00

Wrist Pin: 300-335
O.E. No. 69J-11633-00-00

Clips: 400-335
O.E. No. 69J-11634-01-00

YAMAHA

4-Stroke
150 HP 2004-2010

Piston: 100-320K
O.E. No. 63P-W1164-00-00

Ring Set: 200-335
O.E. No. 63P-11603-01-00
63P-11603-00-00

Wrist Pin: 300-335
O.E. No. 69J-11633-00-00

YAMAHA

4-Stroke
150HP 2011-UP

Piston: 100-325K
O.E. No. 63P-11631-10-93

Ring Set: 200-335
O.E. No. 63P-11603-01-00
63P-11603-00-00

Wrist Pin: 300-335
O.E. No. 69J-11633-00-00

Clips: 400-335
O.E. No. 69J-11634-01-00

Available in over sizes: Std., .010, and .020. See charts for part numbers.

New York • 1-800-222-3375
631-244-8060 • fax 631-244-0556
61 Floyd Run, Bohemia, NY 11716
Puerto Rico
787-832-2499 • fax 787-832-2939
234 Balboa St., Mayaquez, Puerto Rico 00681-2605
e-mail: info@wsmparts.com • www.wsmparts.com

WSM Pistons

Applications

PISTON KITS						RING SETS	
Model	**Cyl.**	**Bore**	**Part No.**	**Pos.**	**Size**	**Ring No.**	**Size**
9.9/15HP 84-09	2	2.205	**18-4135**		Std.	**18-3976**	Std.
			18-4136		.010	**18-3977**	.010
			18-4137		.020	**18-3978**	.020
20 HP 96-97	2	2.638	**100-250K**		Std.	**200-250**	Std.
			100-250-04K		.010	**200-250-04**	.010
			100-250-05K		.020	**200-250-05**	.020
			100-250-06K		.030	**200-250-06**	.030
			100-250-07K		.040	**200-250-07**	.040
25 HP 88-Up	2	2.638	**100-250K**		Std.	**200-250**	Std.
(6L2)			**100-250-04K**		.010	**200-250-04**	.010
			100-250-05K		.020	**200-250-05**	.020
			100-250-06K		.030	**200-250-06**	.030
			100-250-07K		.040	**200-250-07**	.040
C40 90-97	2	2.953	**100-263K**		Std.	**200-263**	Std.
C40 HP 79-89			**100-263-05K**		.020	**200-263-05**	.020
40 HP 84-88	3	2.638	**100-260K**		Std.	**200-260**	Std.
50 HP 84-88	3		**100-260-04K**		.010	**200-260-04**	.010
3 Ring			**100-260-05K**		.020	**200-260-05**	.020
			100-260-06K		.030	**200-260-06**	.030
			100-260-07K		.040	**200-260-07**	.040
40 HP 89-03	3	2.638	**100-252K**		Std.	**200-252**	Std.
50 HP 89-03	3		**100-252-04K**		.010	**200-252-04**	.010
2 Ring			**100-252-05K**		.020	**200-252-05**	.020
			100-252-06K		.030	**200-252-06**	.030
			100-252-07K		.040	**200-252-07**	.040
60 HP 91-Up	3	2.834	**100-255K**		Std.	**200-255**	Std.
70 HP 84-05	3		**100-255-04K**		.010	**200-255-04**	.010
			100-255-05K		.020	**200-255-05**	.020
			100-255-06K		.030	**200-255-06**	.030
			100-255-07K		.040	**200-255-07**	.040
C48, C55 2	3	3.228	**100-265K**		Std.	**200-265**	Std.
75 HP ALL	3		**100-265-04K**		.010	**200-265-04**	.010
85 HP ALL			**100-265-05K**		.020	**200-265-05**	.020
90 HP ALL			**100-265-06K**		.030	**200-265-06**	.030
			100-265-07K		.040	**200-265-07**	.040
115 HP 84-92	V4/V6	3.544	**100-270PK**	Port	Std.	***200-270**	Std.
130 HP 84-92			**100-270SK**	Stbd.	Std.	***200-270**	Std.
150 HP 84-92			**100-270-04PK**	Port	.010	***200-270-04**	.010
175 HP 84-92			**100-270-04SK**	Stbd.	.010	***200-270-04**	.010
200 HP 84-91			**100-270-05PK**	Port	.020	***200-270-05**	.020
225 HP 84-91			**100-270-05SK**	Stbd.	.020	***200-270-05**	.020
21.5mm Wrist Pin			**100-270-06PK**	Port	.030	***200-270-06**	.030
6E5 Rod			**100-270-06SK**	Stbd.	.030	***200-270-06**	.030
			100-270-07PK	Port	.040	***200-270-07**	.040
			100-270-07SK	Stbd.	.040	***200-270-07**	.040

PRECISION
Arizona • 1-800-977-1414
480-966-1550 • fax 480-966-1565
16441 N. 91St. Suite 105 Scottsdale, AZ 85260
Florida • 1-866-417-4072
941-238-0960 • fax 941-238-0965
1899 60th Place East, Bradenton, FL 34203
e-mail: info@wsmparts.com • www.wsmparts.com

WSM Pistons
Applications

			PISTON KITS			RING SETS	
Model	**Cyl.**	**Bore**	**Part No.**	**Pos.**	**Size**	**Ring No.**	**Size**
115 HP 84-92	V4/V6	3.544	**100-270PPK**	Port	Std.	***200-270**	Std.
130 HP 84-92			**100-270SPK**	Stbd.	Std.	***200-270**	Std.
150 HP 84-92			**100-270-04PPK**	Port	.010	***200-270-04**	.010
175 HP 84-92			**100-270-04SPK**	Stbd.	.010	***200-270-04**	.010
200 HP 84-91			**100-270-05PPK**	Port	.020	***200-270-05**	.020
225 HP 84-91			**100-270-05SPK**	Stbd.	.020	***200-270-05**	.020
21.5mm Wrist Pin			**100-270-06PPK**	Port	.030	***200-270-06**	.030
"6E5 Rod"			**100-270-06SPK**	Stbd.	.030	***200-270-06**	.030
PLATINUM SERIES			**100-270-07PPK**	Port	.040	***200-270-07**	.040
			100-270-07SPK	Stbd.	.040	***200-270-07**	.040
115 HP 93 & up	V4/V6	3.544	**100-275PK**	Port	Std.	**200-270**	Std.
130 HP 93-99			**100-275SK**	Stbd.	Std.	**200-270**	Std.
150 HP 93 & up			**100-275-04PK**	Port	.010	**200-270-04**	.010
175 HP 93 & up			**100-275-04SK**	Stbd.	.010	**200-270-04**	.010
200 HP 93 & up			**100-275-05PK**	Port	.020	**200-270-05**	.020
225 HP 92-95			**100-275-05SK**	Stbd.	.020	**200-270-05**	.020
23 mm Wrist Pin			**100-275-06PK**	Port	.030	**200-270-06**	.030
6R5 Rod			**100-275-06SK**	Stbd.	.030	**200-270-06**	.030
			100-275-07PK	Port	.040	**200-270-07**	.040
			100-275-07SK	Stbd.	.040	**200-270-07**	.040
115 HP 93-01	V4/V6	3.544	**100-275PPK**	Port	Std.	**200-270**	Std.
130 HP 93-99			**100-275SPK**	Stbd.	Std.	**200-270**	Std.
150 HP 93-01			**100-275-04PPK**	Port	.010	**200-270-04**	.010
175 HP 93-01			**100-275-04SPK**	Stbd.	.010	**200-270-04**	.010
200 HP 93-01			**100-275-05PPK**	Port	.020	**200-270-05**	.020
225 HP 92-95			**100-275-05SPK**	Stbd.	.020	**200-270-05**	.020
23 mm Wrist Pin			**100-275-06PPK**	Port	.030	**200-270-06**	.030
6R5 Rod			**100-275-06SPK**	Stbd.	.030	**200-270-06**	.030
PLATINUM SERIES			**100-275-07PPK**	Port	.040	**200-270-07**	.040
			100-275-07SPK	Stbd.	.040	**200-270-07**	.040
150Hp 4 Stroke	IL4		**100-320K**		.Std	**200-335**	Std.
2004-2010			**100-320-04K**		.010	**200-335-04**	.010
			100-320-05K		.020	**200-335-05**	.020
150Hp 4 Stroke	IL4		**100-325K**		.Std	**200-335**	Std.
2011-2015			**100-325-04K**		.010	**200-335-04**	.010
			100-325-05K		.020	**200-335-05**	.020

**Rings fit Yamaha OEM pistons from 1989 and up. For 1989 and under use 1 taper ring and 1 rectangular ring.*

New York • 1-800-222-3375
631-244-8060 • fax 631-244-0556
61 Floyd Run, Bohemia, NY 11716

Puerto Rico
787-832-2499 • fax 787-832-2939
234 Balboa St., Mayaquez, Puerto Rico 00681-2605

e-mail: info@wsmparts.com • www.wsmparts.com

WSM Applications Pistons

PISTON KITS						RING SETS	
Model	**Cyl.**	**Bore**	**Part No.**	**Pos.**	**Size**	**Ring No.**	**Size**
225 HP 94-01	V6	3.544	**100-285PK**	Port	Std.	**200-270**	Std.
76 degree			**100-285SK**	Stbd.	Std.	**200-270**	Std.
250 HP 95-01			**100-285-04PK**	Port	.010	**200-270-04**	.010
Dish Top Piston			**100-285-04SK**	Stbd.	.010	**200-270-04**	.010
			100-285-05PK	Port	.020	**200-270-05**	.020
			100-285-05SK	Stbd.	.020	**200-270-05**	.020
			100-285-06PK	Port	.030	**200-270-06**	.030
			100-285-06SK	Stbd.	.030	**200-270-06**	.030
			100-285-07PK	Port	.040	**200-270-07**	.040
			100-285-07SK	Stbd.	.040	**200-270-07**	.040
225 HP 94-01	V6	3.544	**100-285PPK**	Port	Std.	**200-270**	Std.
76 degree			**100-285SPK**	Stbd.	Std.	**200-270**	Std.
250 HP 95-01			**100-285-04PPK**	Port	.010	**200-270-04**	.010
Dish Top Piston			**100-285-04SPK**	Stbd.	.010	**200-270-04**	.010
			100-285-05PPK	Port	.020	**200-270-05**	.020
PLATINUM SERIES			**100-285-05SPK**	Stbd.	.020	**200-270-05**	.020
			100-285-06PPK	Port	.030	**200-270-06**	.030
			100-285-06SPK	Stbd.	.030	**200-270-06**	.030
			100-285-07PPK	Port	.040	**200-270-07**	.040
			100-285-07SPK	Stbd.	.040	**200-270-07**	.040
150 HPDi 01- up	V6	3.544	**100-290PK**	Port	Std.	**200-290**	Std.
175 HPDi 01- up			**100-290SK**	Stbd.	Std.	**200-290**	Std.
200 HPDi 01- up			**100-290-04PK**	Port	.010	**200-290-04**	.010
23 mm Wrist Pin			**100-290-04SK**	Stbd.	.010	**200-290-04**	.010
2.6 Liter			**100-290-05PK**	Port	.020	**200-290-05**	.020
			100-290-05SK	Stbd.	.020	**200-290-05**	.020
			100-290-06PK	Port	.030	**200-290-06**	.030
			100-290-06SK	Stbd.	.030	**200-290-06**	.030
			100-290-07PK	Port	.040	**200-290-07**	.040
			100-290-07SK	Stbd.	.040	**200-290-07**	.040
150 HPDi 01- up	V6	3.544	**100-290PPK**	Port	Std.	**200-290**	Std.
175 HPDi 01- up			**100-290SPK**	Stbd.	Std.	**200-290**	Std.
200 HPDi 01- up			**100-290-04PPK**	Port	.010	**200-290-04**	.010
23 mm Wrist Pin			**100-290-04SPK**	Stbd.	.010	**200-290-04**	.010
2.6 Liter			**100-290-05PPK**	Port	.020	**200-290-05**	.020
			100-290-05SPK	Stbd.	.020	**200-290-05**	.020
PLATINUM SERIES			**100-290-06PPK**	Port	.030	**200-290-06**	.030
			100-290-06SPK	Stbd.	.030	**200-290-06**	.030
			100-290-07PPK	Port	.040	**200-290-07**	.040
			100-290-07SPK	Stbd.	.040	**200-290-07**	.040
3.3L HPDI	V6	3.660	**100-295PK**	Port	Std.	**200-295**	Std.
200HP, 225HP,			**100-295SK**	Stbd.	Std.	**200-295**	Std.
250HP, 300HP			**100-295-05PK**	Port	.020	**200-295-05**	.020
			100-295-05SK	Stbd.	.020	**200-295-05**	.020
			100-295-06PK	Port	.030	**200-295-06**	.030
			100-295-06SK	Stbd.	.030	**200-295-06**	.030
			100-295-07PK	Port	.040	**200-295-07**	.040
			100-295-07SK	Stbd.	.040	**200-295-07**	.040
F225 2006-Up			**100-335K**	Port	Std.	**200-335**	Std.
F250			**100-335-04PK**	Port	.010	**200-335-04**	.010
LF250			**100-335-05PK**	Port	.020	**200-335-05**	.020

PRECISION
Arizona • 1-800-977-1414
480-966-1550 • fax 480-966-1565
16441 N. 91St. Suite 105 Scottsdale, AZ 85260
Florida • 1-866-417-4072
941-238-0960 • fax 941-238-0965
1899 60th Place East, Bradenton, FL 34203
e-mail: info@wsmparts.com • www.wsmparts.com

Crankshafts

850-320-01

850-325

850-335

Model	Notes	O.E No.	Part No.
3 CYL. CRANKS			
3 Cyl. 40-50HP	with oil	6H4-11400-13-00	**850-315WSM**
NEW NO CORE REQ. injection gear			
3 Cyl. 60-70HP	without oil	6K5-11400-00-00	**850-320-01**
NEW NO CORE REQ. injection gear			
3 Cyl. 75-85-90HP		688-11411-01	**850-325**
V4 CRANKSHAFTS			
V4 90 degree Small Taper		6E5-11411-00	**850-330**
V4 90 degree Large Taper		6N7-11411-00	**850-335**
V6 CRANKSHAFTS			
V6 90 degree Medium Taper		6R3-11411-09	**850-345**
V6 90 degree Large Taper		67H-11411-01	**850-355**
V6 150 HP Small Taper		6G5-11411-01 6G5-11411-02	**850-340**

Connecting Rods

Part No. 800-300
O.E. 688-11651-00
3 Cyl. 75-85-90 HP, 2 Cyl. 40-50 HP
Replacement Rod Bolt: 805-300
O.E. No. 90109-08M71

Part No. 800-302
O.E. No. 6H4-11651-00
40-50HP 3Cyl.

Part No. 800-304
O.E. 6K5-11651-00-00
3 Cyl. 60-70 HP

Part No. 800-306
O.E. 6E5-11650-01-00
84-92 V4/V6 21.5mm
Wrist Pin
Replacement Rod Bolt: 805-300
O.E. No. 90109-08M71

Part No. 800-308
O.E. 6R5-11650-01-00
93 & Up V4/V6 23mm
Wrist Pin
Replacement Rod Bolt: 805-300
O.E. No. 90109-08M71

Replacement Rod Bolt: 805-310
O.E. No. 90109-09001-00

New York • 1-800-222-3375
631-244-8060 • fax 631-244-0556
61 Floyd Run, Bohemia, NY 11716
Puerto Rico
787-832-2499 • fax 787-832-2939
234 Balboa St., Mayaquez, Puerto Rico 00681-2605
e-mail: info@wsmparts.com • www.wsmparts.com

Bearings

Picture Gallery

Upper Rod Bearing, Large Pin
Part No. 010-160
O.E. 93310-323V6-00
Fits: 23mm 1993 & Later V4/ V6 90 deg.
Washer Part No. 010-160W
O.E. No. 90201-23M01-00

Upper Rod Bearing
Part No. 010-161
O.E. 93310-326V4-00
Fits: 76 deg 225/250 HP
Washer Part No. 010-161W
O.E. No. 90201-26M03-00

Upper Rod Bearing Needles Only
Part No. 010-158-31
O.E No. 93602-14104-00
Fits:9.9-15 HP

Wrist Pin Bearing
Part No. 010-159-31
O.E. 93602-18M12-00
Fits: 20-25 HP

Upper Rod Bearing Needles Only
Part No. 010-180-30
O.E No. 93602-20M02-00
Fits: 40-50HP 3 Cyl.

Upper Rod Bearing Needles Only
Part No. 010-181-30
O.E. No. 93603-18M09-00
Fits: 60-70HP 3 Cyl.

Upper Rod Bearing Needles Only
Part No. 010-162
O.E. 93603-21111-00
Fits: 75-90 3 Cyl., V4-V6

Washer Part No. 010-180W
O.E. 6H4-11641-00
Fits: 40-50hp 3 Cyl.
One Per Pack

Washer Part No. 010-162W
O.E. No. 90201-20417-00
Fits: 60-70 3 Cyl.
One Per Pack

Washer Part No. 010-162W
O.E. 90201-20417-00
Fits: 75-90 3 Cly.
One Per Pack

Washer Part No. 010-162-01W
O.E. 90201-21M75-00
Fits: V4-V6 6E5 Rod

Lower Split Rod Bearing
Part No. 010-164
O.E. 93310-730V8-00
Fits: 75-90 HP

Lower Split Rod Beaing
Part No. 010-165
O.E. 93310-836V2-00
Fits: V4/V6 90 deg.

Lower Rod Split Bearing
Part No. 010-166
O.E. 93310-840V8-00, 93310-840U1-00
Fits: V6 76 degree

PRECISION
Arizona • 1-800-977-1414
480-966-1550 • fax 480-966-1565
16441 N. 91St. Suite 105 Scottsdale, AZ 85260
Florida • 1-866-417-4072
941-238-0960 • fax 941-238-0965
1899 60th Place East, Bradenton, FL 34203
e-mail: info@wsmparts.com • www.wsmparts.com

Bearings

Picture Gallery

Upper Main Bearing
Part No. 010-210-01
O.E. 93306-30548-00
Fits: 40-50 HP 3 Cyl.

Upper Main Bearing
Part No. 010-212
O.E. 93311-632U7-00
Fits: 25-30HP (6J8)

Upper Main Bearing
Part No. 010-219
O.E. 93306-209U1-00
Fits: 76 Degree

Upper Main Bearing
Part No. 010-295
O.E No. 93311-636U6
Fits: 60-70 HP 3 Cyl.

Upper Main Bearing
Part No. 010-295-01
O.E. 93311-940V0-00
Fits: 76 Degree

Upper Main Bearing
Part No. 010-295-05
O.E. 93310-636U4
Fits: 75-90 HP 3 Cyl.

Upper Main Bearing
Part No. 010-295-10
O.E. 93311-940U3-00
Fits: V4-V6 90 Degree

Center Main Bearing
Part No. 010-210-01
O.E. 93306-30548-00
Fits: 40-50 HP 3 Cyl.

Center Main Bearing
Part No. 010-295-12
O.E. 93310-835U8
Fits: 75-90 HP 3 Cyl.

Center Main Bearing
Part No. 010-295-13
O.E. 93310-959U00-00
Fits: V6 76 Degree

Center Main Bearing
Part No. 010-295-15
O.E. 93310-954U1-00
Fits: V4/V6 90 deg.

Lower Main Bearing
Part No. 010-210-01
O.E. 93306-30548-00
Fits: 40-50 HP 3 Cyl.

Lower Main Bearing
Part No. 010-207-05
O.E. No. 93306-308U0-00
Fits: V6 76 Degree

Lower Main Bearing
Part No. 010-222-02
O.E. 93306-208-U0-00
Fits: V4/V6 90 Deg.

Lower Main Bearing
Part No. 010-215
O.E. No. 93306-306V1-00
Fits: 60-70 HP 3 Cyl.

Lower Main Bearing
Part No. 010-295-02
O.E. 93306-206U5-00
Fits: 75-90 HP 3 Cyl.

New York • 1-800-222-3375
631-244-8060 • fax 631-244-0556
61 Floyd Run, Bohemia, NY 11716
Puerto Rico
787-832-2499 • fax 787-832-2939
234 Balboa St., Mayaquez, Puerto Rico 00681-2605
e-mail: info@wsmparts.com • www.wsmparts.com

Bearings

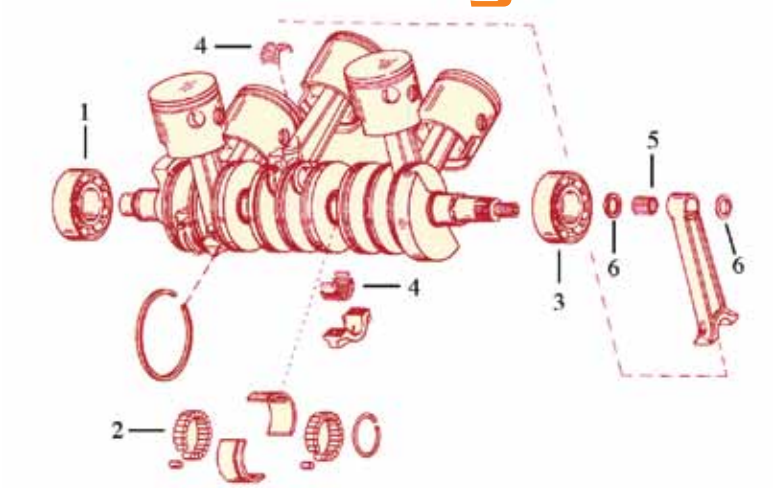

Horse Power	Year	Cyl.	Ref# 1 Lower Main Bearing	Ref# 2 Center Main Bearing cmplte	Ref# 3 Upper Main Bearing	Ref# 4 Lower Rod Split Caged	Ref# 5 Upper Rod Needles	Ref# 5 Upper Rod Caged	Ref# 6 Wrist Pin Washers
9-15		2					010-158-31		
25 6L2	88-up	2			010-212		010-159		
25-30	84-86	2					010-180-30		
40	79-90	2		010-210-01			010-164	010-162	010-162W
40-50	84 & up	3	010-210-01	010-210-01		010-210-01		010-180-30	010-180W
55	92-95	2				010-164	010-162		
60	91-06	3	010-215		010-295		010-181-30		
70	84-06	3	010-215		010-295		010-181-30		
75	94 & up	3	010-295-02	010-295-12	010-295-05	010-164	010-162		010-162W
85	92-93	3	010-295-02	010-295-12	010-295-05	010-164	010-162		010-162W
90	84-95	3	010-295-02	010-295-12	010-295-05	010-164	010-162		010-162W
115 90'	84-92	V4	010-222-02	010-295-15	010-295-10	010-165	010-162		010-162-01W
115 90'	93-98	V4	010-222-02	010-295-15	010-295-10	010-165		010-160	
130 90'	84-92	V4	010-222-02	010-295-15	010-295-10	010-165	010-162		010-162-01W
130 90'	93-98	V4	010-222-02	010-295-15	010-295-10	010-165		010-160	
150 90'	84-92	V6	010-222-02	010-295-15	010-295-10	010-165	010-162		010-162-01W
150 90'	93 & up	V6	010-222-02	010-295-15	010-295-10	010-165		010-160	
175 90'	84-92	V6	010-222-02	010-295-15	010-295-10	010-165	010-162		010-162-01W
175 90'	93-98	V6	010-222-02	010-295-15	010-295-10	010-165		010-160	
200 90'	84-92	V6	010-222-02	010-295-15	010-295-10	010-165	010-162		010-162-01W
200 90'	93-98	V6	010-222-02	010-295-15	010-295-10	010-165		010-160	
225 90'	84-92	V6	010-222-02	010-295-15	010-295-10	010-165	010-162		010-162-01W
225 90'	93-98	V6	010-222-02	010-295-15	010-295-10	010-165		010-160	
225 76'	94 & up	V6	010-207-05	010-295-13	010-295-01	010-166		010-161	
					010-219				
250-300 3.3L	90 & up	V6	010-207-05	010-295-13	010-295-01	010-166		010-161	
					010-219				

PRECISION
Arizona • 1-800-977-1414
480-966-1550 • fax 480-966-1565
16441 N. 91St. Suite 105 Scottsdale, AZ 85260
Florida • 1-866-417-4072
941-238-0960 • fax 941-238-0965
1899 60th Place East, Bradenton, FL 34203
e-mail: info@wsmparts.com • www.wsmparts.com

POWER HEAD GASKET KIT

Kit No. 500-317

O.E. No. 682-W0001-06

9.9/15 HP 94-95

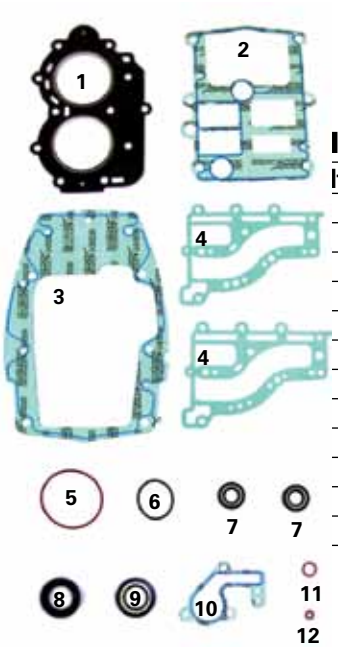

INDIVIDUAL GASKETS/SEALS

Item #	Description	O.E. No.	Qty.	Part No.
1	Cylinder Head Gasket	6E7-11181-A1	1	**506-30**
2	Base Gasket	682-41112-A1	1	**511-22**
3	Upper Casing	682-45113-A1	1	**511-23**
4	Exhaust Inner Gasket	682-41112-A1	2	**523-29**
5	O-Ring, Lower Crank	93210-53679	1	**527-53**
6	O-Ring, Fuel Filter	93210-32738	1	**527-85**
7	Oil Seal, Lower Housing	93101-13M11	2	**552-49**
8	Oil Seal, Lower Crank	93101-20M29	1	**552-50T**
9	Oil Seal, Upper Crank	93110-23M00	1	**552-51T**
10	Thermostat Housing Gasket	682-12414-A1	1	**555-119**
11	Fiber Washer	1J2-14398-00	1	**555-120**
12	Fiber Washer	655-14398-00	1	**555-727**

POWER HEAD GASKET KIT

Kit No. 500-310

O.E. No. 6G8-W0001-A3

1996-Up 9.9-15 HP 4-Stroke

INDIVIDUAL GASKETS/SEALS

Item #	Description	O.E. No.	Qty.	Part No.
1	Cylinder Head Gasket	6G8-11181-A1	1	**506-20**
2	Cylinder Gasket	6G8-11351-A0	1	**511-09**
3	O-Ring	93210-10M61	1	**527-57**
4	O-Ring (6G8)	93210-13M63	3	**527-58**
5	O-Ring	93210-11M59	1	**527-59**
6	O-Ring (664)	93210-09M01	3	**527-60**
7	O-Ring (437)	93210-24235	1	**527-61**
8	Oil Seal (6G8)	93102-18M21	1	**552-16**
9	Oil Seal (6G8)	93102-30M22	1	**552-17**
10	Oil Seal (6G8)	93101-25M24	1	**552-18**
11	Intake Gasket	6G8-14198-A0	1	**555-45**
12	Intake Manifold Gasket	6G8-13646-A0	2	**555-46**
13	Breather Gasket	6G8-15374-00	1	**555-47**
14	Cover Gasket	6G8-12414-A0	1	**555-48**
15	Intake Manifold Gasket	6G8-13645-00	1	**555-49**
16	Exhaust Outer Gasket	6G8-41114-00	1	**555-50**
17	Exhaust Inner Gasket	6G8-41112-02	1	**555-51**

New York • 1-800-222-3375
631-244-8060 • fax 631-244-0556
61 Floyd Run, Bohemia, NY 11716
Puerto Rico
787-832-2499 • fax 787-832-2939
234 Balboa St., Mayaquez, Puerto Rico 00681-2605
e-mail: info@wsmparts.com • www.wsmparts.com

Gasket Kits

POWER HEAD GASKET KIT

Kit No. 500-315

O.E. No. 66M-W0001-01

2001-2004 4-Stroke 15 HP

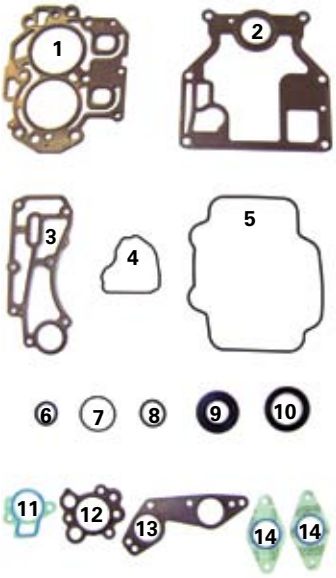

INDIVIDUAL GASKETS/SEALS

Item #	Description	O.E. No.	Qty.	Part No.
1	Cylinder Head Gasket	66M-11181-10	1	**506-28**
2	Cylinder Gasket	66M-11351-10	1	**511-20**
3	Exhaust Outer Gasket	66M-41114-01	1	**523-27**
4	Cylinder 3 Seal	66M-11357-00	1	**527-109**
5	Cylinder 2 Seal	66M-11356-00	1	**527-110**
6	O-Ring (6G8)	93210-20M65	1	**527-113**
7	O-Ring (6L2)	93210-35M86	1	**527-117**
8	O-Ring (437)	93210-24235	1	**527-61**
9	Oil Seal	93102-25M52	1	**552-40**
10	Oil Seal	93102-35M51	1	**552-41**
11	Cover Gasket	62Y-12414-00	1	**541-25**
12	Pump Cover Gasket	66M-13329-10	1	**555-96**
13	Manifold 1 Gasket	66M-13645-00	1	**555-97**
14	Manifold 2 Gasket	66M-13646-00	1	**555-98**

POWER HEAD GASKET KIT

Kit No. 500-311

O.E. No. 6L2-W0001-03

1996-1997 20 HP, 1996-1998, 2000-2005 25 HP

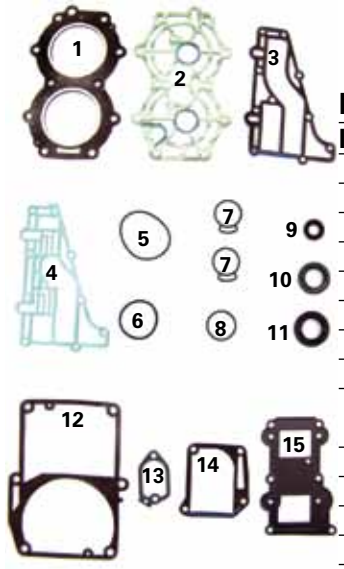

INDIVIDUAL GASKETS/SEALS

Item #	Description	O.E. No.	Qty.	Part No.
1	Cylinder Head Gasket	6L2-11181-A2	1	**506-21**
2	Head Cover Gasket	6L2-11193-A1	1	**506-22**
3	Exhaust Inner Gasket	6L2-41112-A2	1	**523-20**
4	Exhaust Outer Gasket	6L2-41114-A1	1	**523-21**
5	O-Ring (6J8)	93210-56M80	1	**527-116**
6	O-Ring (647)	93210-42159	1	**527-54**
7	Gasket	6L2-14198-00	2	**527-63**
8	Oil Seal (1WG)	93210-32738	1	**527-66**
9	Oil Seal (6A4)	93101-13M37 93101-25M38	1	**552-19**
10	Oil Seal (24.8X38X7)	93102-25142	1	**552-20T**
11	Oil Seal (6J8)	93102-26M27	1	**552-21**
12	Upper Casing Gasket	6L2-45113-A2	1	**555-123**
13	Cover Gasket	61A-12414-A0	1	**541-33**
14	Exhaust Manifold Gasket	6L2-41133-A2	1	**555-53**
15	Valve Seat Gasket	6L2-13521-00	1	**555-54**

PRECISION
Arizona • 1-800-977-1414
480-966-1550 • fax 480-966-1565
16441 N. 91St. Suite 105 Scottsdale, AZ 85260
Florida • 1-866-417-4072
941-238-0960 • fax 941-238-0965
1899 60th Place East, Bradenton, FL 34203
e-mail: info@wsmparts.com • www.wsmparts.com
VISA MasterCard AMERICAN EXPRESS DISCOVER NOVUS

Gasket Kits

POWER HEAD GASKET KIT

Kit No. 500-314

O.E. No. 65W-W0001-00

1998-2001 4-Stroke 25 HP, 03 LST1200-B

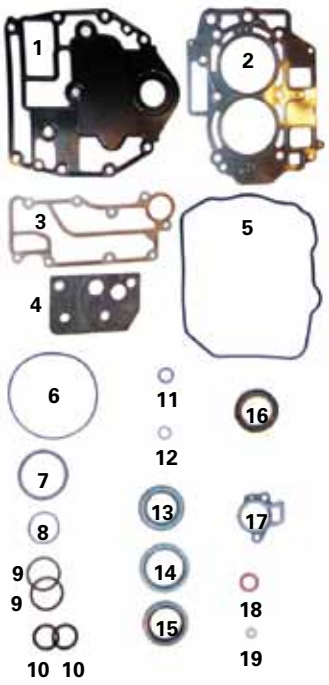

INDIVIDUAL GASKETS/SEALS

Item #	Description	O.E. No.	Qty.	Part No.
1	Cylinder Gasket	65W-11351-00	1	**511-19**
2	Cylinder Head Gasket	65W-11181-30	1	**506-27**
3	Exhaust Outer Gasket	65W-41114-00	1	**523-26**
4	Breather Cover Gasket	65W-11169-00	1	**555-85**
5	Cylinder 2 Seal	65W-11356-00	1	**527-91**
6	Seal	65W-15663-00	1	**527-92**
7	Manifold 1 Gasket	65W-13645-00	1	**527-93**
8	O-Ring (62Y)	93210-33MH2	1	**527-94**
9	Gasket	65W-14198-00	2	**527-95**
10	O-Ring (437)	93210-24235	2	**527-61**
11	O-Ring (11H)	93210-14515	1	**527-98**
12	O-Ring (62Y)	93210-12MG9	1	**527-99**
13	Oil Seal (62Y)	93102-35M47	1	**552-35**
14	Oil Seal (62Y)	93102-43M42	1	**552-36**
15	Oil Seal (62Y)	93102-37M40	1	**552-37**
16	Seal	65W-14457-10	1	**552-38**
17	Cover Gasket	62Y-12414-00	1	**541-25**
18	Gasket (663)	90430-14115	1	**515-46**
19	Gasket 256113960000	90430-06014	1	**555-88**

POWER HEAD GASKET KIT

Kit No. 500-318

O.E. No. 61T-W0001-02, O.E. No. 689-W0001-04-00

1997 COM 30 HD

INDIVIDUAL GASKETS/SEALS

Item #	Description	O.E. No.	Qty.	Part No.
1	Cylinder Head Gasket	61N-11181-A1	1	**506-25**
2	Head Cover 1 Gasket	61T-11193-A1	1	**506-26**
3	Base Gasket	61T-45113-A0	1	**511-16**
4	Exhaust Inner Gasket	6K8-41122-A1	1	**523-22**
5	Exhaust Outer Gasket	6K8-41124-A1	1	**523-23**
6	O-Ring	-	1	**527-66**
7	O-Ring (683)	93210-57M09	1	**527-81**
8	O-Ring	93210-40659	1	**527-82**
9	Oil Seal PTO End	93101-25M38	1	**009-700**
10	Oil Seal (6H4) Mag	93102-25M28	1	**552-30T**
11	Oil Seal (6J8)	93104-16M36	2	**552-25**
12	Valve Seat Gasket	648-13621-A1	1	**555-70**
13	Manifold 1 Gasket	648-13645-A0	1	**555-71**
14	Cover Gasket	655-12414-A1	1	**555-73**
15	Fuel Pump Gasket	650-24431-A0	1	**541-26**

New York • 1-800-222-3375
631-244-8060 • fax 631-244-0556
61 Floyd Run, Bohemia, NY 11716
Puerto Rico
787-832-2499 • fax 787-832-2939
234 Balboa St., Mayaquez, Puerto Rico 00681-2605
e-mail: info@wsmparts.com • www.wsmparts.com

Gasket Kits

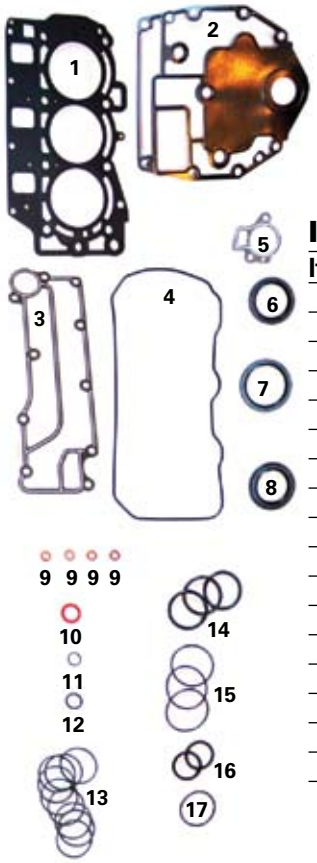

POWER HEAD GASKET KIT

Kit No. 500-320

O.E. No. 67C-W0001-00

00 F40ESAY/MSHY/MLHY/TLRY, 01 F30TRZ/F40ERZ/MHZ/TRZ

00-01 4-Stroke 30/40 HP

INDIVIDUAL GASKETS/SEALS

Item #	Description	O.E. No.	Qty.	Part No.
1	Cylinder Head Gasket	67C-11181-01	1	**506-29**
2	Cylinder Gasket	67C-11351-00	1	**511-21**
3	Exhaust Outer Gasket	67C-41114-00	1	**523-28**
4	Cylinder 2 Seal	67C-11356-00	1	**527-115**
5	Cover Gasket	62Y-12414-00	1	**555-109**
6	Oil Seal (62Y)	93102-37M40	1	**552-37**
7	Oil Seal (62Y)	93102-43M42	1	**552-36**
8	Oil Seal (62Y)	93102-35M47	1	**552-35**
9	Gasket 256113960000	90430-06014	4	**555-88**
10	Gasket (663)	90430-14115	1	**555-78**
11	O-Ring	93210-12MG9	1	**527-118**
12	O-Ring (11H)	93210-14515	1	**527-98**
13	O-Ring	67C-14561-00	9	**527-117**
14	O-Ring	93210-34MJ6	3	**527-119**
15	O-Ring	67C-14562-00	3	**527-120**
16	O-Ring (437)	93210-24235	2	**527-61**
17	O-Ring (62Y)	93210-33MH2	1	**527-94**

POWER HEAD GASKET KIT

Kit No. 500-312

O.E. No. 6R6-W0001-02

1994-1997 COM 40 HP

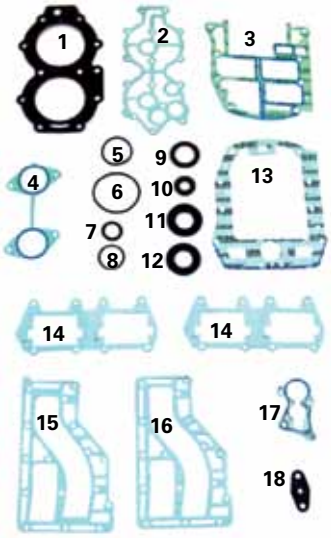

INDIVIDUAL GASKETS/SEALS

Item #	Description	O.E. No.	Qty.	Part No.
1	Cylinder Head Gasket	676-11181-A1	1	**506-23**
2	Head Cover 1 Gasket	6E9-11193-A0	1	**506-24**
3	Base Gasket	6F5-45113-A0	1	**511-15**
4	Gasket	6E9-14198-A0	1	**518-35**
5	O-Ring (647)	93210-42159	1	**527-54**
6	O-Ring (663)	93210-62269	1	**527-69**
7	O-Ring (676)	93210-22M02	1	**527-72**
8	O-Ring	-		N/A
9	Oil Seal (697)	93102-32M07	1	**552-24**
10	Oil Seal (6A8)	93101-16M36	1	**552-25**
11	Oil Seal (6A0)	93101-28M19	1	**552-26T**
12	Oil Seal (6A0)	93102-28M08	1	**552-27T**
13	Upper Casing Gasket	676-45114-A1	1	**555-27**
14	Intake Manifold Gasket	676-13646-A0	2	**555-59**
15	Exhaust Outer Gasket	6E9-41114-A0	1	**555-60**
16	Exhaust Inner Gasket	676-41112-A0	1	**555-61**
17	Cover Gasket	6E9-12414-A1	1	**555-62**
18	Fuel Pump Gasket	650-24431-A0	1	**541-26**

PRECISION
Arizona • 1-800-977-1414
480-966-1550 • fax 480-966-1565
16441 N. 91St. Suite 105 Scottsdale, AZ 85260
Florida • 1-866-417-4072
941-238-0960 • fax 941-238-0965
1899 60th Place East, Bradenton, FL 34203
e-mail: info@wsmparts.com • www.wsmparts.com

Gasket Kits

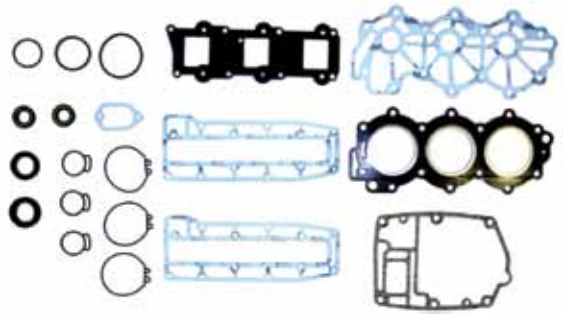

POWER HEAD GASKET KIT
SOLD AS KIT ONLY

Kit No. 500-319

O.E. No. OE# 6J8-W0001-01-00, -A1, -A2

Fits: 3 Cyl. 2 Stroke

25 & 30 HP 1987-93

POWER HEAD GASKET KIT

Kit No. 500-313

O.E. No. 6H4-W0001-04-00

1984-1994 40 & 50 HP

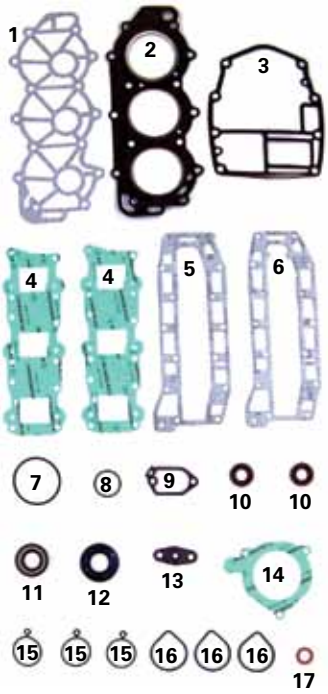

INDIVIDUAL GASKETS/SEALS

Item #	Description	O.E. No.	Qty.	Part No.
1	Head Cover Gasket	6H4-11193-A1	1	**506-04**
2	Cylinder Head Gasket	6H4-11181-00	1	**506-07**
3	Base Gasket	6H4-45113-A0	1	**511-18**
4	Valve Seat Gasket	6H4-13621-A1	2	**518-36**
5	Exhaust Inner Gasket	6H4-41112-A0	1	**523-24**
6	Exhaust Outer Gasket	6H4-41114-A0	1	**523-25**
7	Lower Crank O-Ring	93210-58M21	1	**525-03**
8	O-Ring, Fuel Filter	93210-32738	1	**527-85**
9	Thermostat Gasket	61A-12414-A0	1	**541-33**
10	Oil Seal, Lower Housing	93101-16M36	2	**552-25**
11	Oil Seal, Upper Crank	93102-23096	1	**552-28T**
12	Oil Seal, Lower Crank	93102-25M28	1	**552-30T**
13	Fuel Pump Gasket	650-24431-A0	1	**541-26**
14	Upper Housing Gasket	6H4-15369-A1	1	**555-75**
15	Carb. Mounting Gasket	6H4-14198-01	3	**555-76**
16	Air Box Seal Seal	6H3-14457-01	3	**555-77**
17	Head Plug Gasket	90430-14115	1	**555-78**

POWER HEAD GASKET KIT

Kit No. 500-316

O.E. No. 63D-W0001-00-00

1995-Up 40/50 HP

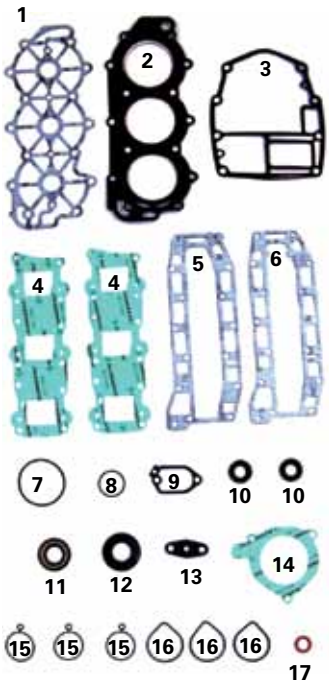

INDIVIDUAL GASKETS/SEALS

Item #	Description	O.E. No.	Qty.	Part No.
1	Head Cover Gasket, Late	63D-11193-A0	1	**506-05**
2	Cylinder Head Gasket	63D-11181-A1	1	**506-08**
3	Base Gasket	6H4-45113-A0	1	**511-18**
4	Reed Block Gasket	6H4-13621-A1	2	**518-36**
5	Exhaust Inner Gasket	6H4-41112-A0	1	**523-24**
6	Exhaust Outer Gasket	6H4-41114-A0	1	**523-25**
7	Lower Crank O-Ring	93210-58M21	1	**525-03**
8	O-Ring, Fuel Filter	93210-32738	1	**527-85**
9	Thermostat Gasket	61A-12414-A0	1	**541-33**
10	Oil Seal, Lower Housing	93101-16M36	2	**552-25**
11	Oil Seal, Upper Crank	93102-23096	1	**552-28T**
12	Oil Seal, Lower Crank	93102-25M28	1	**552-30T**
13	Fuel Pump Gasket	650-24431-A0	1	**541-26**
14	Upper Housing Gasket	6H4-15369-A1	1	**555-75**
15	Carburetor Mounting Gasket	6H4-14198-01	3	**555-76**
16	Air Box Seal Gasket	6H3-14457-01	3	**555-77**
17	Head Plug Gasket	90430-14115	1	**555-78**

VISA MasterCard AMERICAN EXPRESS DISCOVER NOVUS

New York • 1-800-222-3375
631-244-8060 • fax 631-244-0556
61 Floyd Run, Bohemia, NY 11716

Puerto Rico
787-832-2499 • fax 787-832-2939
234 Balboa St., Mayaquez, Puerto Rico 00681-2605

e-mail: info@wsmparts.com • www.wsmparts.com

WSM PERFORMANCE PARTS

Gasket Kits

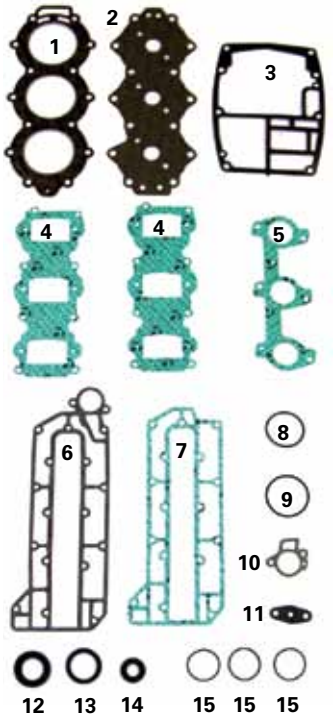

POWER HEAD GASKET KIT

Kit No. 500-330

O.E. No. 6H3-W0001-02-00

60-70 HP 84 & Up

INDIVIDUAL GASKETS/SEALS

Item #	Description	O.E. No.	Qty.	Part No.
1	Head Gasket	6H3-11181-A0-00	1	**506-10**
2	Head Cover Gasket	6H3-11193-A0-00	1	**506-11**
3	Base Gasket	6H3-45113-A0-00	1	**511-10**
4	Reed Valve Gasket	6H3-13622-A1-00	2	**518-10**
5	Carb. Gasket	6H3-14198-01-00	1	**518-11**
6	Exhaust Cover Gasket	6H3-41112-A0-00	1	**523-10**
7	Exhaust Cover Gasket	6H3-41114-A0-00	1	**523-11**
8	Upper Crank O-Ring	93210-46M16-00	1	**527-10**
9	Lower Crank O-Ring	93210-65M50-00	1	**526-13**
10	Thermostat Cover	6H3-12414-A1-00	1	**541-25**
11	Fuel Pump Gasket	650-24431-A0-00	1	**541-26**
12	Lower Crank Oil Seal	93102-36M24-00	1	**551-10**
13	Upper Crank Oil Seal	93102-30M23-00	1	**551-11**
14	Lower Crank Oil Seal	93106-18M01-00	1	**551-12**
15	Carb Mounting O-Rings	93210-39ME4-00	3	**527-14**

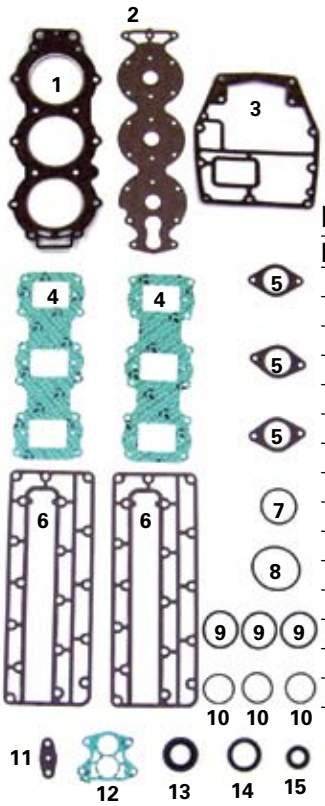

POWER HEAD GASKET KIT

Kit No. 500-335

O.E. No. 688-W0001-A0-00

1984-Up 75/85/90 HP

INDIVIDUAL GASKETS/SEALS

Item #	Description	O.E. No.	Qty.	Part No.
1	Head Gasket	688-11181-A0-00	1	**506-12**
2	Head Cover Gasket	688-11193-A1-00	1	**506-13**
3	Base Gasket	688-45113-A0-00	1	**511-11**
4	Reed Gasket	688-13621-00-00	2	**518-12**
5	Carb. Gasket	688-14198-00-00	3	**518-13**
6	Exhaust Cover Gasket	688-41112-A0-00	2	**523-12**
7	Upper Crank O-Ring	93210-46M16-00	1	**527-10**
8	Lower Crank O-Ring	93210-62269-00	1	**527-12**
9	Carb. O-Ring	93210-46044-00	3	**527-13**
10	O-Ring	93210-39ME4-00	3	**527-14**
11	Fuel Pump Gasket	650-24431-A0-00	1	**541-26**
12	Thermostat Gasket	688-12414-A1-00	1	**541-27**
13	Upper Crank Oil Seal	93102-36M24-00	1	**551-10**
14	Lower Crank Oil Seal	93102-30M23-00	1	**551-11**
15	Lower Crank Oil Seal	93106-18M01-00	1	**551-13**

PRECISION
Arizona • 1-800-977-1414
480-966-1550 • fax 480-966-1565
16441 N. 91St. Suite 105 Scottsdale, AZ 85260
Florida • 1-866-417-4072
941-238-0960 • fax 941-238-0965
1899 60th Place East, Bradenton, FL 34203
e-mail: info@wsmparts.com • www.wsmparts.com

POWER HEAD GASKET KIT

Kit No. 500-336

75-115 HP 4-Stroke

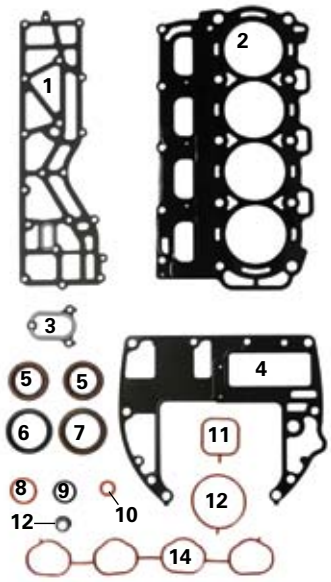

INDIVIDUAL GASKETS/SEALS

Item #	Description	O.E. No.	Qty.	Part No.
1	Exhaust Gasket	67F-41114-A2-00	1	**523-19**
2	Head Gasket	67F-11181-03-00	1	**506-36**
3	Poppet Valve Gasket	67F-12435-A0-00	1	**541-31**
4	Base Gasket	68V-11351-00-00	1	**511-17**
5	Cam Shaft Seal	93102-38008-00	2	**551-21**
6	Upper Crank Shaft Oil Seal	93102-48017-00	1	**551-25**
7	Lower Crank Shaft Oil Seal	93101-48002-00	1	**551-22**
8	Fuel Pump Mounting O-Ring	93210-30682-00	1	**525-07**
9	Oil Plug O-Ring (437)	93210-29198-00	1	**527-74**
10	Fiber Washer	90430-14115-00	1	**515-46**
11	Intake Manifold Gasket (3)	68V-13647-00-00	1	**555-81**
12	Sending Unit Grommet	68V-85753-00-00	1	**555-84**
13	Intake Manifold Gasket (2)	68V-13646-00-00	1	**555-80**
14	Intake Manifold Gasket (1)	68V-13645-10-00	1	**555-79**

POWER HEAD GASKET KIT

Kit No. 500-340

O.E. No. 6E5-W0001-01-00, 6F3-W0001-04-00, 6F3-W0001-A4-00

All V4

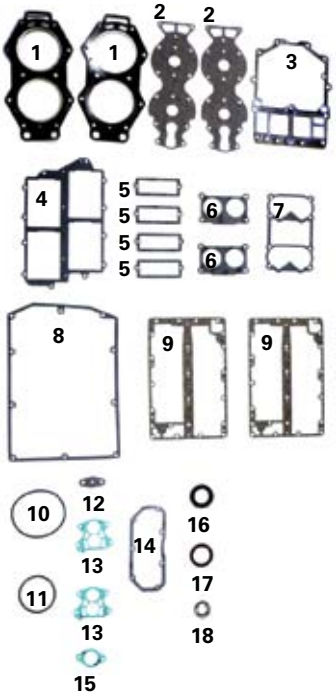

INDIVIDUAL GASKETS/SEALS

Item #	Description	O.E. No.	Qty.	Part No.
1	Head Gasket	6E5-11181-A1	2	**506-14**
2	Head Cover Gasket	6E5-11193-A0-00	2	**506-15**
3	Base Gasket	6G5-45113-A1-00	1	**511-12**
4	Intake Manifold Gasket	6E5-13645-A1-00	1	**518-14**
5	Reed Gasket	6E5-13621-00-00	4	**518-15**
6	Carb. Gasket	6E5-14198-A2-00	2	**518-16**
7	Carb. Gasket	6E5-14483-01-00	1	**518-17**
8	Air Box Gasket	6E5-14416-00-00	1	**518-18**
9	Exhaust Gasket	6E5-41112-A1-00	2	**523-13**
10	Upper Bearing O-Ring	93211-04384-00	1	**527-15**
11	Lower Bearing	93210-74M35-00	1	**527-16**
12	Fuel Pump Gasket	650-24431-A0-00	1	**541-26**
13	Thermostat Gasket	688-12414-A1-00	2	**541-27**
14	Cover Gasket	6E5-11381-A2-00	1	**541-29**
15	Bypass Gasket	6G5-11382-A1-00	1	**541-28**
16	Upper Crank Oil Seal	93102-40M38-00	1	**551-14**
17	Lower Crank Oil Seal	93102-35M13-00	1	**551-15**
18	Lower Crank Oil Seal	93101-22M15-00	1	**551-16**

New York • 1-800-222-3375
631-244-8060 • fax 631-244-0556
61 Floyd Run, Bohemia, NY 11716
Puerto Rico
787-832-2499 • fax 787-832-2939
234 Balboa St., Mayaquez, Puerto Rico 00681-2605
e-mail: info@wsmparts.com • www.wsmparts.com

Gasket Kits

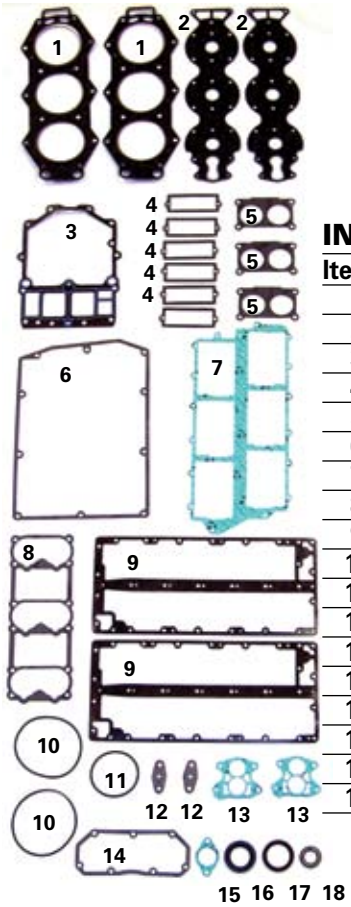

POWER HEAD GASKET KIT

Kit No. 500-345

O.E. No. 6R3-W0001-03-00, 6R3-W0001-A3-00

V6 90º Carb with Vertical Reeds

INDIVIDUAL GASKETS/SEALS

Item #	Description	O.E. No.	Qty.	Part No.
1	Head Gasket	6G5-11181-A1-00	2	**506-16**
2	Head Cover Gasket	6G5-11193-01-00	2	**506-17**
3	Base Gasket	6G5-45113-A1-00	1	**511-12**
4	Reed Gasket	6E5-13621-00-00	6	**518-15**
5	Carb. Gasket	6E5-14198-A2-00	3	**518-16**
6	Air Box Gasket to 89	6E5-14416-A1-00	1	**518-18**
7	Intake Manifold Gasket	6G5-13645-A1-00	1	**518-19**
8	Carb. to Air box Gasket	6G5-14483-A1-00	1	**518-25**
9	Exhaust Gasket	6G5-41112-A1-00	2	**523-14**
10	Upper Bearing O-Ring	93211-04384-00	2	**527-15**
11	Lower Bearing O-Ring	93210-74M35-00	1	**527-16**
12	Fuel Pump Gasket	650-24431-A0-00	2	**541-26**
13	Thermostat Gasket	688-12414-A1-00	2	**541-27**
14	Cover Gasket	6E5-11381-A2-00	1	**541-29**
15	Bypass Gasket	6G5-11382-A1-00	1	**541-28**
16	Upper Crank Oil Seal	93102-40M38-00	1	**551-14**
17	Lower Crank Oil Seal	93102-35M13-00	1	**551-15**
18	Lower Crank Oil Seal	93101-22M15-00	1	**551-16**

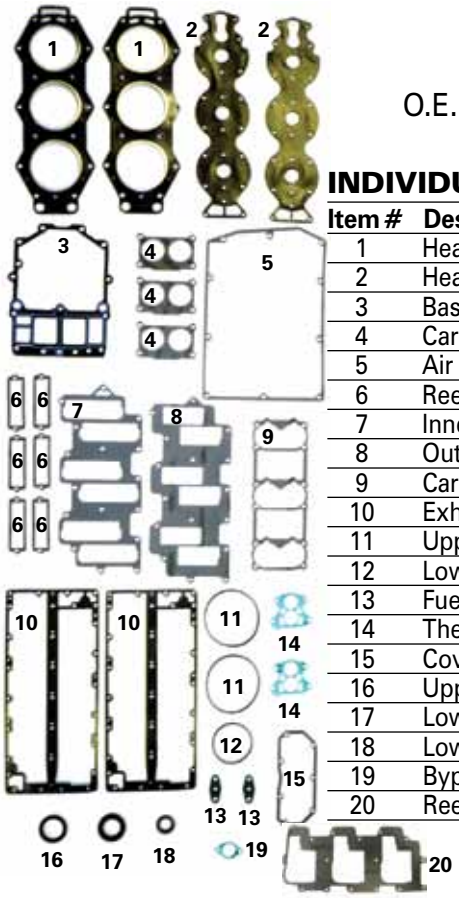

POWER HEAD GASKET KIT

Kit No. 500-347

O.E. No. 6K7-W0001-04-00, 6K7-W0001-A4-00, 64F-W0001-01-00

V6 90º Carb with Horizontal Reeds

INDIVIDUAL GASKETS/SEALS

Item #	Description	O.E. No.	Qty.	Part No.
1	Head Gasket	6G5-11181-A1-00	2	**506-16**
2	Head Cover Gasket	6G5-11193-01-00	2	**506-17**
3	Base Gasket	6G5-45113-A1	1	**511-12**
4	Carb. Gasket	6E5-14198-A2-00	3	**518-16**
5	Air Box Gasket to 89	6G5-14416-A1-00	1	**518-18**
6	Reed Gasket XL Series	687-13621-00-00	6	**518-21**
7	Inner Horizontal, Reed Gasket	6K7-13646-A2-00	1	**518-22**
8	Outer Horizontal, Reed Gasket	6K7-13645-A2-00	1	**518-23**
9	Carb. to Air box Gasket	6G5-14483-A1-00	1	**518-25**
10	Exhaust Gasket	6G5-41112-A1-00	2	**523-14**
11	Upper Bearing O-Ring	93211-04384-00	2	**527-15**
12	Lower Bearing O-Ring	93210-74M35-00	1	**527-16**
13	Fuel Pump Gasket	650-24431-A0-00	2	**541-26**
14	Thermostat Gasket	688-12414-A1-00	2	**541-27**
15	Cover Gasket	6E5-11381-A2-00	1	**541-29**
16	Upper Crank Oil Seal	93102-40M38-00	1	**551-14**
17	Lower Crank Oil Seal	93102-35M13-00	1	**551-15**
18	Lower Crank Oil Seal	93101-22M15-00	1	**551-16**
19	Bypass Gasket	6G5-11382-A1-00	1	**541-28**
20	Reed Gasket	64E-13645-A0-00	1	**518-24**

PRECISION
Arizona • 1-800-977-1414
480-966-1550 • fax 480-966-1565
16441 N. 91St. Suite 105 Scottsdale, AZ 85260
Florida • 1-866-417-4072
941-238-0960 • fax 941-238-0965
1899 60th Place East, Bradenton, FL 34203
e-mail: info@wsmparts.com • www.wsmparts.com
VISA MasterCard AMERICAN EXPRESS DISCOVER NOVUS

Gasket Kits

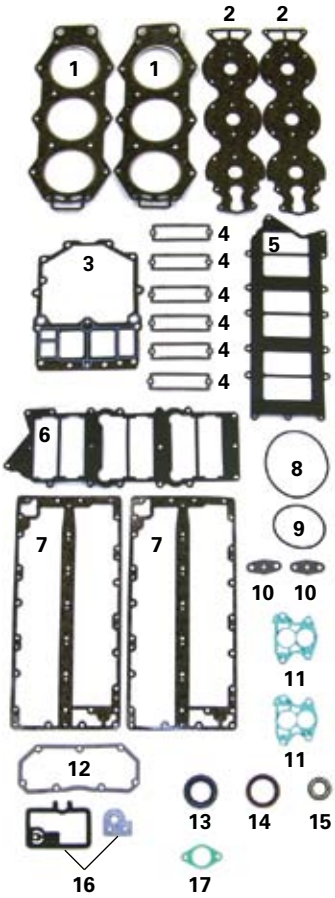

POWER HEAD GASKET KIT

Kit No. 500-350

O.E. No. 67H-W0001-00-00

V6 90° EFI

INDIVIDUAL GASKETS/SEALS

Item #	Description	O.E. No.	Qty.	Part No.
1	Head Gasket	6G5-11181-A1-00	2	**506-16**
2	Head Cover Gasket	6G5-11193-01-00	2	**506-17**
3	Base Gasket	6G5-45113-A1-00	1	**511-12**
4	Reed Gasket	61A-13621-A0-00	6	**518-28**
5	Intake Manifold Gasket	65L-13646-00-00	1	**518-30**
6	Intake. Man. to Block	65L-13645-00-00	1	**518-31**
7	Exhaust Gasket	6G5-41112-A1-00	2	**523-14**
8	Upper Bearing O-Ring	93211-04384-00	2	**527-15**
9	Lower Bearing O-Ring	93210-74M35-00	1	**527-16**
10	Fuel Pump Gasket	650-24431-A0-00	2	**541-26**
11	Thermostat Gasket	688-12414-A1-00	2	**541-27**
12	Cover Gasket	6E5-11381-A2-00	1	**541-29**
13	Upper Crank Oil Seal	93102-40M38-00	1	**551-14**
14	Lower Crank Oil Seal	93102-35M13-00	1	**551-15**
15	Lower Crank Oil Seal	93101-22M15-00	1	**551-16**
16	02 Sensor Gasket	68F-W1135-00-00	1	**541-35**
17	Bypass Gasket	6G5-11382-A1-00	1	**541-28**

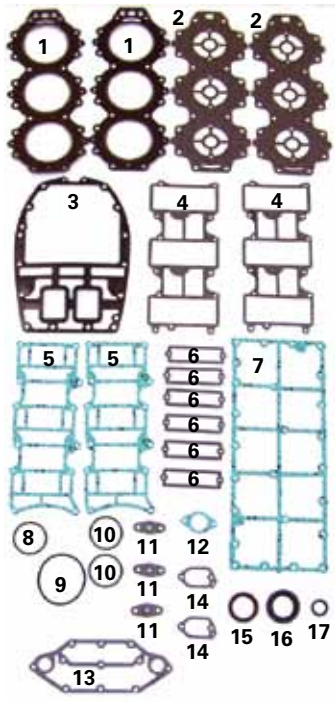

POWER HEAD GASKET KIT

Kit No. 500-353

O.E. No. 61A-W0001-A1-00

V6 76° 225/250 Carburated

INDIVIDUAL GASKETS/SEALS

Item #	Description	O.E. No.	Qty.	Part No.
1	Head Gasket	61A-11181-A1-00	2	***506-18**
2	Head Cover Gasket	61A-11193-A1-00	2	**506-19**
3	Base Gasket	61A-45113-A0-00	1	**511-13**
4	Intake Gasket	61A-13646-00-00	2	**518-26**
5	Manifold Gasket	61A-13645-00-00	2	**518-27**
6	Reed Gasket	61A-13621-A0-00	6	**518-28**
7	Exhaust Gasket	61A-41112-A0-00	1	**523-15**
8	Lower Crank O-Ring	93210-65M50-00	1	**526-13**
9	Lower Crank O-Ring	93210-81MA6	1	**527-17**
10	Upper Crank O-Ring	93210-54M54	2	**526-13**
11	Fuel Pump Gasket	650-24431-A0-00	3	**541-26**
12	Bypass Gasket	6G5-11382-A1	1	**541-28**
13	Water Passage Gasket	61A-11381-A0-00	1	**541-32**
14	Thermostat Gasket	61A-12414-A0-00	2	**541-33**
15	Upper Crank Oil Seal	93102-40M38-00	1	**551-14**
16	Lower Crank Oil Seal	93102-40M36-00-00	1	**551-17**
17	Lower Crank Oil Seal	93104-22M07-00-00	1	**551-18**

New York • 1-800-222-3375
631-244-8060 • fax 631-244-0556
61 Floyd Run, Bohemia, NY 11716
Puerto Rico
787-832-2499 • fax 787-832-2939
234 Balboa St., Mayaquez, Puerto Rico 00681-2605
e-mail: info@wsmparts.com • www.wsmparts.com

Gasket Kits

POWER HEAD GASKET KIT

Kit No. 500-355

O.E. No. 65L-W0001-00-00

V6 76° 225/250 EFI 200 HP 1998-01

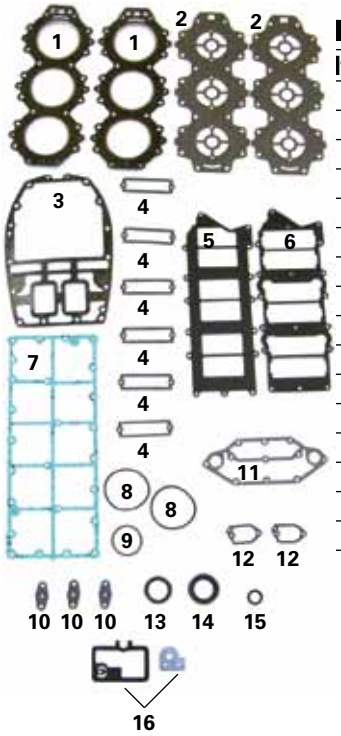

INDIVIDUAL GASKETS/SEALS

Item #	Description	O.E. No.	Qty.	Part No.
1	Head Gasket	61A-11181-A1-00	2	*506-18
2	Head Cover Gasket	61A-11193-A1-00	2	506-19
3	Base Gasket	61A-45113-A0-00	1	511-13
4	Reed Gasket	61A-13621-A0-00	6	518-28
5	Inj. to Manifold	65L-13646-00-00	1	518-30
6	Intake Man. to Block	65L-13645-00-00	1	518-31
7	Exhaust Gasket	61A-41112-A0-00	1	523-15
8	Lower Crank O-Ring	93210-81MA6	2	527-17
9	Upper Crank O-Ring	93210-54M54	1	526-13
10	Fuel Pump Gasket	650-24431-A0	3	541-26
11	Water Pass Gasket	61A-11381-A0-00	1	541-32
12	Water Pass Gasket	61A-12414-A0-00	2	541-33
13	Upper Crank Oil Seal	93102-40M38	1	551-14
14	Lower Crank Oil Seal	93101-22M15-00	1	551-17
15	Lower Crank Oil Seal	93102-40M36-00	1	551-18
16	02 Sensor Gasket	68F-W1135-00-00	1	541-35

***WSM Tech Tip**

Head Gasket is installed with the wide side of the fire ring towards the block.

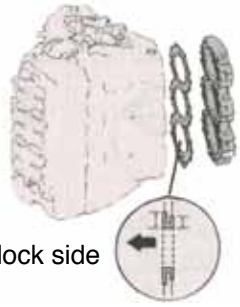

#506-18
Yamaha V-6 76 DEG
OE: 61A-11181-A1-00,
69L-11181-01-00

Block side

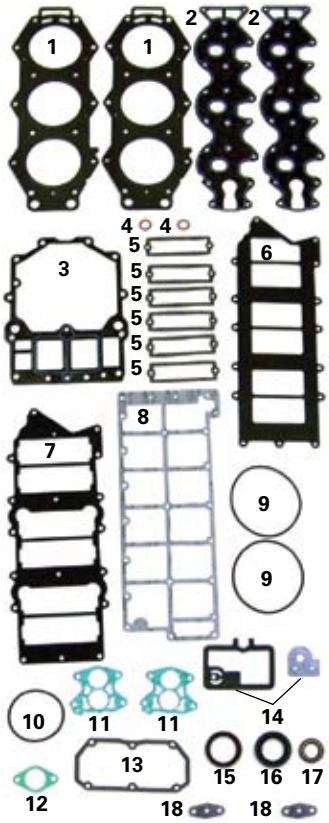

POWER HEAD GASKET KIT

Kit No. 500-357

O.E. No. 68F-W0001-01-00

2.6 Liter HPDI 90°

INDIVIDUAL GASKETS/SEALS

Item #	Description	O.E. No.	Qty.	Part No.
1	Head Gasket	68F-11181-00-00	2	506-32
2	Head Cover Gasket	68F-11193-01	2	506-33
3	Base Gasket	68F-45113-00	1	511-14
4	Washers	68F-45113-00	2	515-46
5	Reed Gasket	61A-13621-A0	6	518-28
6	Intake Manifold Gasket	65L-13646-00-00	1	518-30
7	Intake Gasket	65L-13645-00	1	518-31
8	Exhaust Gasket	68F-41114-00	1	523-30
9	Upper Bearing O-Ring	93211-04384-00	2	527-15
10	Lower Bearing O-Ring	93210-74M35-00	1	527-16
11	Thermostat Gasket	688-12414-A1-00	2	541-27
12	Bypass Gasket	6G5-11382-A1-00	1	541-28
13	Water Passage Cover	68F-11381-00	1	541-30
14	02 Sensor Kit	68F-W1135-00-00	1	541-35
15	Upper Crank Oil Seal	93102-40M38-00	1	551-14
16	Lower Crank Oil Seal	93102-35M13-00	1	551-15
17	Lower Crank Oil Seal	93101-22M15-00	1	551-16
18	Fuel Pump Gasket	650-24431-A0-00	2	541-26

PRECISION
Arizona • 1-800-977-1414
480-966-1550 • fax 480-966-1565
16441 N. 91St. Suite 105 Scottsdale, AZ 85260
Florida • 1-866-417-4072
941-238-0960 • fax 941-238-0965
1899 60th Place East, Bradenton, FL 34203
e-mail: info@wsmparts.com • www.wsmparts.com
VISA MasterCard AMERICAN EXPRESS DISCOVER NOVUS

Gasket Kits

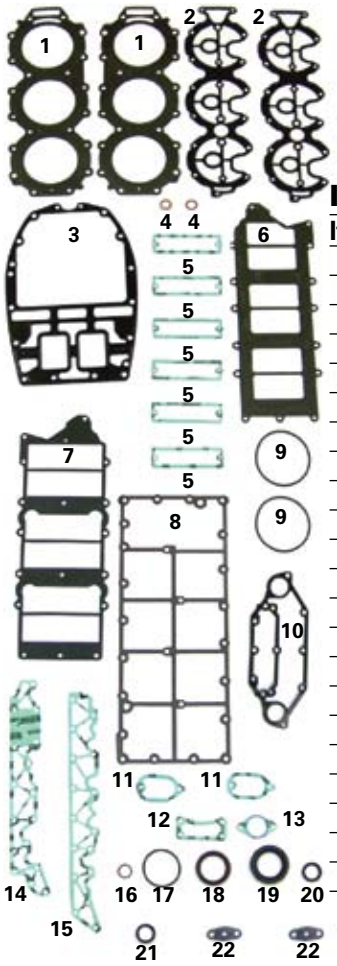

POWER HEAD GASKET KIT

Kit No. 500-359

O.E. No. 6D0-W0001-00-00, 60V-W0001-00-00

3.3 Liter HPDI

INDIVIDUAL GASKETS/SEALS

Item #	Description	O.E. No.	Qty.	Part No.
1	Head Gasket	6D0-11181-00	2	**506-34**
2	Head Cover Gasket	60v-11193-00-00	2	**506-35**
3	Base Gasket	60V-45113-01	1	**511-13-01**
4	Plug Gasket	68F-45113-00	2	**515-46**
5	Reed Valve Gasket	60V-13621-A0	6	**518-29**
6	Intake Gasket	60V-13646-00	1	**518-30-01**
7	Intake Gasket	60V-13645-00	1	**518-31-01**
8	Exhaust Gasket	60V-41112-00	1	**523-15-01**
9	Lower O-Rings	93210-85M32	2	**527-18**
10	Bypass Cover Gasket	60V-11381-00	1	**541-30-01**
11	Thermostat Gasket	60V-12414-A0	2	**541-34**
12	Crank Case Cover Gasket	6D0-15451-00	1	**541-34-01**
13	Bypass Cover Gasket	60V-11382-A0	1	**541-36**
14	Cover Gasket	6D0-15461-00	1	**541-40**
15	Cover Gasket	6D0-15462-00	1	**541-41**
16	Oil Pump O-Ring	93210-18MA9	1	**541-44**
17	Crank O-Ring	60V-11479-00	1	**541-45**
18	Upper Crank Oil Seal	93102-40M38	1	**551-14**
19	Lower Crank Seal	93102-40010	1	**551-17**
20	Crank Seal	93104-22M07	1	**551-18**
21	Lower Seal	93108-40011-00	1	**551-19**
22	Fuel Pump Gasket	650-24431-A0-00	2	**541-26**

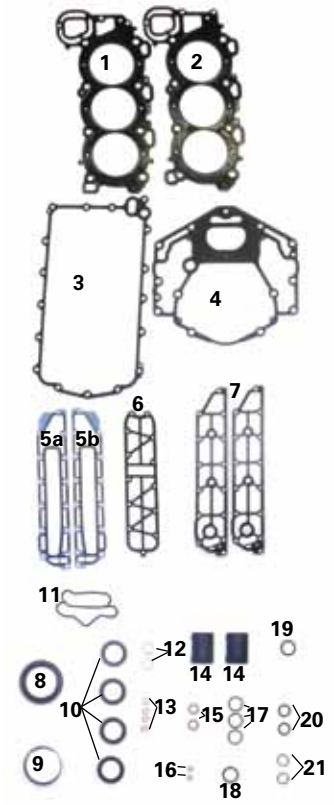

POWER HEAD GASKET KIT

Kit No. 500-365

O.E. No. 6P2-W0001-01-00

225-250 Hp V6 4-Stroke 2006-up

Item #	Description	O.E. No.	Qty.	Part No.
1	Cylinder Head Gasket(STDB)	6P2-11181-00	1	**506-37-01**
2	Cylinder Head Gasket(Port)	6P2-11182-00	1	**506-38-01**
3	Crankcase Gasket	69J-15451-00	1	**541-34-02**
4	Cylinder Gasket	69J-11351-11	1	**511-24**
5a	Exhaust Inner Gasket	6P2-41122-00	1	**523-31-01**
5b	Exhaust Inner Gasket	6P2-41112-00	1	**523-31**
6	Cover Gasket	6P2-1131B-00	1	**541-42**
7	Exhaust Outer Gasket	6P2-41114-00	2	**523-32**
8	Upper Crankshaft Oil Seal	93102-63004	1	**551-20**
9	Cylinder Seal	69J-11355-00	1	**525-19**
10	Cam Shaft Oil Seal	93102-38008	4	**551-21**
11	Gasket	6P2-13477-00	1	**523-33**
12	Gasket	90430-18130	2	**555-127**
13	Gasket	90430-08143-00	4	**555-124**
14	Water Shut Grommet	69J-14664-00	2	**525-18**
15	Gasket	90430-14115	2	**515-46**
16	Gasket	90430-05002	2	**555-126**
17	O-Ring	93210-25552	3	**008-599-18**
18	O-Ring	93210-25647	1	**527-73**
19	O-Ring	93210-24235	1	**527-74**
20	O-Ring	93210-19MJ3	2	**527-75**
21	O-Ring	93210-19MJ1	2	**008-562**

Valve Stem Seals are not included in the kit, they are sold separately!
Order P/N 120-100 O.E #69J-12119-00-00

New York • 1-800-222-3375
631-244-8060 • fax 631-244-0556
61 Floyd Run, Bohemia, NY 11716
Puerto Rico
787-832-2499 • fax 787-832-2939
234 Balboa St., Mayaquez, Puerto Rico 00681-2605
e-mail: info@wsmparts.com • www.wsmparts.com

Application Chart

HP	Year	Cyl.	Gasket Kit
9.9-15	94-95	2	**500-317**
9.9-15	1997-Up	2	**500-310**
	2001-04	2	**500-315**
25&30	1984-92	2	**500-311**
25	1988-94	2	**500-311**
25	1996-99	3	**500-314**
30	1987-93	3	**500-314**
C30HD	1997	2	**500-318**
30/40 4-Stroke	00-04	3	**500-320**
40	1984-88	3	**500-313**
40	1992-UP	3	**500-313**
C40	94-97	2	**500-312**
40/50	1984-84	3	**500-313**
40-50	1995-UP	3	**500-316**
PRO 50/50(6H5)	1984-94	3	**500-313**
CV55,C55	1989,91-94	2	**18-4418**
60/70	1984-98	3	**500-330**
90(6HI)-75-85	1984-LATER	3	**500-335**
75,85&90	1994-LATER	3	**500-335**
75-115 4-Stroke		4	**500-336**
115	1986-LATER	V4	**500-340**
130	1988-LATER	V4	**500-340**
Excel	87-89	V6	**500-347**
2.6L HPdi	-	V6	**500-357**
2.6L efi 90 degree	-	V6	**500-350**
C150	84-02	V6	**500-345**
DX,LX,SX 150	99	V6	**500-353**
SX 150	01-02	V6	**500-350**
VX 150	2000	V6	**500-353**
175	84&99	V6	**500-345**
150-200 2.6L HPDI	2000-UP	V6	**500-357**
150-225 90 degree	1984-1998	V6	**500-347**
LX 200	1999	V6	**500-353**
SX 200	2002	V6	**500-353**
V 200	98-99	V6	**500-355**
200-250 3.3L HPDI	2000-UP	V6	**500-359**
200,225	1990,92-2001	V6	**500-353**
225-250 4-Stroke	2006-UP	V6	**500-365**
LX 225	00-01	V6	**500-355**
SX 225	94-96	V6	**500-350**
S,L 225	97-99	V6	**500-355**
V 225	98-99	V6	**500-355**
S,L 250	97-99	V6	**500-355**
LX 225,250	00-01	V6	**500-355**
L250(61A)250(61B)	92-UP	V6	**500-355**
300 3.3L HPDI	2004-UP	V6	**500-359**

PRECISION
Arizona • 1-800-977-1414
480-966-1550 • fax 480-966-1565
16441 N. 91St. Suite 105 Scottsdale, AZ 85260
Florida • 1-866-417-4072
941-238-0960 • fax 941-238-0965
1899 60th Place East, Bradenton, FL 34203
e-mail: info@wsmparts.com • www.wsmparts.com

Carburetor Kits

Picture Gallery

Part No. 600-50
with float
OE No. 6H1-W0093-00

Part No. 600-50-01
without float
OE No. 6H1-W0093-00

Part No. 600-55
OE No. 6H1-W0093-10-00

Part No. 600-56-01
OE No. 6A1-W0093-01

Part No. 600-58
OE No. 61N-W0093-00

Part No. 600-59
with float
OE No. 6K7, 6N6, 6E5, 64D

Part No. 600-59-01
without float
OE No. 6K7, 6N6, 6E5, 64D

Part No. 600-62
OE No. 66M-W0093-01

Part No. 600-64
OE No. 67D-W0093-00

Part No. 600-65-01
OE No. 6G1-W0093-00-00

Part No.600-66
OE No. 67F-W0093-00

New York • 1-800-222-3375
631-244-8060 • fax 631-244-0556
61 Floyd Run, Bohemia, NY 11716

Puerto Rico
787-832-2499 • fax 787-832-2939
234 Balboa St., Mayaquez, Puerto Rico 00681-2605

e-mail: info@wsmparts.com • www.wsmparts.com

Carburetor Kits

Picture Gallery

Part No.600-67-01
OE No. 689-W0093-02-00

Part No. 600-69-01
OE No. 6E7-W0093-04-00

Part No. 600-70
OE No. 63V-W0093-00-00

Part No. 600-74
OE No. 6L2-W0093-00

Part No. 600-78-01
OE No. 6H0-W0093-00

Part No. 600-80
Single Float Carb Kit
O.E. No. 6G5-W0093-08-00

Part No. 600-84
OE No. 6H3-W0093-00-00

Part No. 600-85
OE No. 6H4-W0093-01-00

Part No. 600-86
OE No. 6H4-W0093-03-00

Part No. 600-59-03
O.E. No. 6E5-14384-03-00

Part No. 600-59-02
O.E. No. 64D-14384-00

PRECISION
Arizona • 1-800-977-1414
480-966-1550 • fax 480-966-1565
16441 N. 91St. Suite 105 Scottsdale, AZ 85260
Florida • 1-866-417-4072
941-238-0960 • fax 941-238-0965
1899 60th Place East, Bradenton, FL 34203
e-mail: info@wsmparts.com • www.wsmparts.com

Carburetor Kits

Application Chart

Model/HP	Serial No./Year	Carb. Kit with float	Carb. Kit without float
3	1989-02		**600-65-01**
4	1999-02	**600-64**	-
8	1984-96		**600-65-01**
9.9/15	1996-09	**600-70**	
9.9/15	1985-91		**600-69-01**
F15	1998-06	**600-62**	-
20	1996-97	**600-74**	-
25	1984-87		**600-67-01**
25	1988-04	**600-74**	-
C25	1990-97		**600-67-01**
25/30		**600-84**	-
30	1984-86		**600-67-01**
30 4 Stroke	2000-05		
C30	1990-92		**600-67-01**
C30	1993-97	**600-58**	-
40	1984-88	**600-85**	-
40	1989-04	**600-86**	-
C40	1990-98	**600-50**	**600-50-01**
C40	1997-02	**600-86**	-
45/50	1984-88	**600-84**	-
40/50	1989-97	**600-86**	-
p40	19998	**600-86**	-
50	1984-88	**600-85**	-
50	1989-04	**600-86**	-
C50	1998-01	**600-86**	-
P50	1991-96	**600-86**	-
C60	1996-01	**600-84**	-
P60	1991	**600-84**	-
P60	1992-Up	**600-57-01**	
E60	1995-00	**600-84**	-
C60 & C70	2000-01	**600-57-01**	
70	1984-91	**600-84**	-
70	1992-Up	**600-57-01**	
C70	2000-01	**600-84**	-

New York • 1-800-222-3375
631-244-8060 • fax 631-244-0556
61 Floyd Run, Bohemia, NY 11716
Puerto Rico
787-832-2499 • fax 787-832-2939
234 Balboa St., Mayaquez, Puerto Rico 00681-2605
e-mail: info@wsmparts.com • www.wsmparts.com

Carburetor Kits

Application Chart

Model/HP	Serial No./Year	Carb. Kit with float	Carb. Kit without float
C75	1994-96	600-50	600-50-01
C75	1998-99	-	600-78-01
E75	1995-00	600-50	600-50-01
P75	1996-1999		600-55
C80	1997	-	600-78-01
F80	1999-02	600-66	-
C85	1989-96	600-50	600-50-01
90	1984-91	600-50	600-50-01
90	1992-Up		600-55
F100	1999-02	600-66	-
115	1990-91	600-59	600-59-01
115/130	1990-91	600-59	600-59-01
V4-V6 (single float)			600-80
150/175/200	1990-91	600-59	600-59-01
150/175/200	1985-86	600-80	-
150/200L	1996-99	600-59	600-59-01
150/175	2000-01	600-59	600-59-01
D150	1997-98	600-59	600-59-01
L150	1996-01	600-59	600-59-01
P150	1996-99	600-59	600-59-01
V150	2000-01	600-59	600-59-01
150/175/200	1990-91	600-59	600-59-01
175	1996-01	600-59	600-59-01
P175	1996-99	600-59	600-59-01
V175	2000	600-59	600-59-01
200	1985-86	600-80	-
200	1990-91	600-59	600-59-01
200	1996-99	600-59	600-59-01
P200	1991-92	600-59	600-59-01
P200	1996-99	600-59	600-59-01
225 2.6L	1996-99	600-59	600-59-01
225 3.1L	1990-96	-	600-56-01
250 3.1L	1990-96	-	600-56-01
V6 Excel	1987-89	600-59	600-59-01

PRECISION
Arizona • 1-800-977-1414
480-966-1550 • fax 480-966-1565
16441 N. 91St. Suite 105 Scottsdale, AZ 85260
Florida • 1-866-417-4072
941-238-0960 • fax 941-238-0965
1899 60th Place East, Bradenton, FL 34203
e-mail: info@wsmparts.com • www.wsmparts.com

Fuel Pumps

Diaphragm Fuel Pumps

Part No. 600-100
O.E. No. 692-24410-01-00
Fits:25-90 HP

Part No. 600-102
O.E No. 62Y-24410-00-00, 04-00
Fits: F25-F60

Part No. 600-105
O.E. No. 6E5-24410-01-00
Fits:V4 / V6

Diaphragm Pump Repair Kits

Part No. 600-100-01
Fits: 40-90HP for 600-100 fuel pump

Part No.600-105-01
Fits V4 / V6 for 600-105 fuel pump

Electronic Fuel Pumps

Part No. 600-131
Fits: 50-90 Hp 4 Strokes
O.E No. 6C5-13907-00-00

Part No. 600-110
O.E. No. 65L-13907-00-00
Fits: V6 EFI 97-99

Part No. 600-110-01
O.E. No. 66K-13907-00-00
Fits: EFI

Part No. 600-111
O.E. No. 68V-13907-00-00
Fits: 115 Hp 4-Stroke

Part No. 600-104
O.E. No. 68F-13907-01-00
Fits: 150-200 Hp HPDI

Part No. 600-178
Fits: F150 2004-2015
O.E No. 63P-13907-00-00, 03-00

Part No. 600-115
O.E No. 60V-13907-00-00
Fits: 225-250 Hp HPDI

Part No. 600-122
O.E. No. 69J-13907-00-00,
69J-13907-01-00,
69J-13907-02-00,
69J-13907-03-00
Fits: F225-F250 2001-Up

Part No. 600-122-01
Fits: F200-F225 2002-Up
O.E No 69J-24410-00-00

Part No. 600-148
Fits: F250-F350
O.E No. 6P2-13907-00-00

New York • 1-800-222-3375
631-244-8060 • fax 631-244-0556
61 Floyd Run, Bohemia, NY 11716
Puerto Rico
787-832-2499 • fax 787-832-2939
234 Balboa St., Mayaquez, Puerto Rico 00681-2605
e-mail: info@wsmparts.com • www.wsmparts.com

VST O-Rings

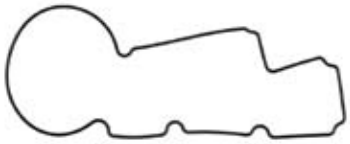

Part No. 600-109
Fits: 150-300HP 1999 & Up
O.E. No. 66K-14984-00-00

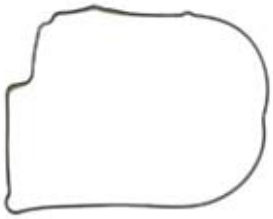

600-109-10
Fits: 200 / 225 / 250
O.E. No. 65L-14984-00-00

Fuel Filters

Part No. 600-283
OE No. 69J-24501-10-00
4-Stroke fuel filter

Part No. 600-285
O.E. No. . 60V-24251-01-00
Fuel Canister/ Top of VST on HPDI

Part No. 600-290
O.E. No. 65L-24563-00-00

Part No. 600-291
O.E. No. 66K-13915-00-00

Part No. 600-292
O.E. No. 65L-13915-00-00

Part No. 600-293
O.E. No. 68F-13915-00-00

Part No. 600-295
O.E. No. 68V-24563-00-00

Part No. 600-296
OE No. 6P3-WS24A-00-00
Fuel Filter
For Filter Housing Marked "6D3" ONLY

Part No. 600-297
OE No. 6D8-WS24A-00-00
Fuel Filter
For Filter Housing Marked "6D8" ONLY

Part No. 600-299
OE No. 68F-24563-00-00
Fuel Filter HPDI

Part No. 600-298
OE No. 68F-24563-10-00
Fuel Filter Element

Part No. 600-289
OE No. 61N-24560-00-00
Fuel Filter Assembly

Part No. 600-274
OE No. 646-24251-02-00
4-Stroke fuel filter

PRECISION
Arizona • 1-800-977-1414
480-966-1550 • fax 480-966-1565
16441 N. 91St. Suite 105 Scottsdale, AZ 85260
Florida • 1-866-417-4072
941-238-0960 • fax 941-238-0965
1899 60th Place East, Bradenton, FL 34203
e-mail: info@wsmparts.com • www.wsmparts.com
VISA MasterCard AMERICAN EXPRESS DISCOVER NOVUS

Fuel Parts

FUEL WATER SEPARATOR KIT W/CLEAR BOWL
Part No.600-456K

FUEL / WATER FILTER
Part No. 600-452
O.E. No.
MAR-FUELF-IL-TR

REPLACEMENT FILTER ONLY
Part No. 600-456
O.E. No. MAR-24563-00-00

REPLACEMENT FILTER ONLY
Part No. 600-453
O.E. No. MAR-MINIF-IL-TR

Oil Filters

615-100

Drain Plug Gasket
Part No. 555-22
Fits:1998-2016
15-350 Hp
O.E No. 90430-14M09-00

Model	Year	Replaces	Part No.
F9.9/T9.9	2006-07	5GH-13440-00-00	**006-563**
F15	1998-99	3FV-13440-00-00	**615-103**
F15	2000-07	5GH-13440-00-00	**006-563**
F25	1998-99	3FV-13440-00-00	**615-103**
F25/T25	2000-06	5GH-13440-00-00	**006-563**
F30	2001-06	5GH-13440-00-00	**006-563**
F40	1999-00	3FV-13440-00-00	**615-103**
F40	2001-06	5GH-13440-00-00	**006-563**
F50/T50	1995-99	3FV-13440-00-00	**615-103**
F50/T50	2000-05	5GH-13440-00-00	**006-563**
F60/T60	2002-05	5GH-13440-00-00	**006-563**
F75/F90	2003-06	5GH-13440-00-00	**006-563**
F80/F100	1999	3FV-13440-00-00	**615-103**
F80	2000-2003	5GH-13440-00-00	**006-563**
F100	2000-02	5GH-13440-00-00	**006-563**
F115	2001-06	5GH-13440-00-00	**006-563**
F150	2004-06	69J-13440-00-00	**615-100**
F200/F225	2002-06	69J-13440-00-00	**615-100**
F250	2005-06	69J-13440-00-00	**615-100**
F350	2008-UP	N26-13440-00-00	**615-107**

New York • 1-800-222-3375
631-244-8060 • fax 631-244-0556
61 Floyd Run, Bohemia, NY 11716
Puerto Rico
787-832-2499 • fax 787-832-2939
234 Balboa St., Mayaquez, Puerto Rico 00681-2605
e-mail: info@wsmparts.com • www.wsmparts.com

Lower Unit Spanner Nut

Part No. 984-100
3cyl 79mm
O.E. No. 697-45384-00-00

Part No. 984-115
3 & 4 Cylinder 101mm
O.E. No. 688-45384-00-00

Part No. 984-120
6cyl 111mm
O.E. No. 6G5-45384-00-00

Part No. 984-125
Fits: F300 & F350 V8 5.3 LITER
O.E. No. 6AW-45384-00-00

Part No. 984-130
Fits: YAMAHA F200-F300 V6 4.2 LITER
O.E. No. 6CB-45384-00-00

Lower Unit Spanner Nut Tool

Part No.	Description
YAMAHA 79MM GEAR HOUSING	
982-100	Thread Chaser
984-100	Replacement Nut
983-100	Thread Chaser Adaptor*
YAMAHA 101MM GEAR HOUSING	
982-115	Thread Chaser
984-115	Replacement Nut
983-115*	Thread Chaser / Nut Tool
YAMAHA 111MM GEAR HOUSING	
982-120	Thread Chaser
984-120	Replacement Nut
983-110*	Thread Chaser / Nut Tool

** Tool will fit both thread chaser and Nut*

PRECISION
Arizona • 1-800-977-1414
480-966-1550 • fax 480-966-1565
16441 N. 91St. Suite 105 Scottsdale, AZ 85260
Florida • 1-866-417-4072
941-238-0960 • fax 941-238-0965
1899 60th Place East, Bradenton, FL 34203
e-mail: info@wsmparts.com • www.wsmparts.com

Lower Unit Individual Seals

Part No.	O.E. No.	I.D.	O.D. mm	Width
552-54	93101-28M16-00	27	43.25	7
552-53	93101-30m17-00	28.5	45.25	7
552-34	93106-09014-00	8.75	19.2	5.25
552-10	93101-22067-00	23	36.25	6
552-23	93101-20m07-00	21.5	34	6.25
552-28T	93102-23096-00	22.75	38.25	7
551-15	93102-35m13-00	34	52.25	8

Tilt Tubes

Tilt Tubes	O.E. No.	Tube Thickness	Tube Length	Short Threaded End	Long Threaded End	Thread Size
986-170	64E-43131-01	1"	12"	w/bracket	1-13/32"	7/8 x 14

Washer

Tilt Tube Bushings	Inside Diameter	Length
986-200	7/8"	1"
986-205	1"	1"
986-210	1"	1-1/2"
Washers		
986-300	7/8"	
986-305	1"	

Bushing

New York • 1-800-222-3375
631-244-8060 • fax 631-244-0556
61 Floyd Run, Bohemia, NY 11716
Puerto Rico
787-832-2499 • fax 787-832-2939
234 Balboa St., Mayaquez, Puerto Rico 00681-2605
e-mail: info@wsmparts.com • www.wsmparts.com

Grease Nuts

CABLE GREASE NUT

Part No. 986-500

1" x 14 Pitch Thread

Built in Grease seal with easy steer nuts, it lubricates and seals out moisture and salt water.

CABLE GREASE NUT

Part No. 986-505

7/8" x 14 Pitch Thread

CABLE NUT FOR CABLE SIDE

Part No. 986-510

7/8" X 14 Pitch Threads I.D. or O.D.

Drain Plug Gasket Kits

Part No.	Description	O.E. No.
555-01K	Drain Plug Gasket Assortment Kit Fits: Mercury, J/E, Yamaha, Suzuki, Nissan/Tohatsu, Volvo	

Note: Kits Included 50 Pieces of Each Gasket In Each Kit

Drain Plug Replacement Gaskets

Sold in packs of 50 Pieces

Part No.	Description	O.E. No.
555-11	Johnson Evinrude/Mercury	12-19183 / 307552
555-15	Johnson / Evinrude	311598
555-13	Nissan / Tohstsu	332600060M
555-14	Suzuki	09168-10022
555-12	Volvo	
555-10	Yamaha	90430-08020-00

PRECISION
Arizona • 1-800-977-1414
480-966-1550 • fax 480-966-1565
16441 N. 91St. Suite 105 Scottsdale, AZ 85260
Florida • 1-866-417-4072
941-238-0960 • fax 941-238-0965
1899 60th Place East, Bradenton, FL 34203
e-mail: info@wsmparts.com • www.wsmparts.com

Impeller

Picture Gallery

Part No. 700-400
O.E. No. 63V-44352-01-00

Part No. 700-410
O.E. No. 47-8479M,
689-44352-02-00

Part No. 700-415
O.E. No. 6H4-44352-02

Part No. 700-420
O.E. No. 6H3-44352-00-00

Part No. 700-425
O.E. No. 688-44352-03-00

Part No. 700-430
O.E. No.
6E5-44352-01-00,
6E5-44352-00-00

Part No. 700-435
O.E. No. 47-84027M,
682-44352-01-00,
682-44352-03-00

Part No. 700-440
O.E. No. 6F5-44352-00

Part No. 700-445
O.E. No. 67F-44352-00-00

Service Kits

Picture Gallery

Part No. 725-415
O.E.No.6H4-W0078-A0-00
6H4-W0078-00-00

Part No. 725-431
O.E. No. 6N6-W0078-00

Part No. 725-432
O.E. No. 6G5-W0078-A1-00

Part No. 725-433
O.E. No. 61A-W0078-01-00
61A-W0078-A1-00
61A-W0078-A2-00
61A-W0078-A3-00

New York • 1-800-222-3375
631-244-8060 • fax 631-244-0556
61 Floyd Run, Bohemia, NY 11716
Puerto Rico
787-832-2499 • fax 787-832-2939
234 Balboa St., Mayaquez, Puerto Rico 00681-2605
e-mail: info@wsmparts.com • www.wsmparts.com

Complete Kits

Picture Gallery

Part No. 750-431
O.E. No. 6N6-W0078-01-00,
6N6-W0078-02-00

Part No. 750-433
O.E. No. 61A-W0078-A2-00,
61A-W0078-A30-00

Application Chart

HP	Year	Impeller	Service Kit	Complete Kit
T8 (6G9)	01-02	**700-400**		
9.9(682)	84-95	**700-435**		
9.9/T9.9 (63V)	96-04	**700-400**		
F/T 9.9 (682)	85-95	**700-435**		
T 9.9 (682)	91-96	**700-435**		
15 (682)	84-95	**700-435**		
15 (63V)	96-04	**700-400**		
F15 (63V)	96-04	**700-400**		
25 (689) A4	84-85	**700-410**	-	
25 (6J8)	96-02	**700-415**		
25 (689) A6	86-97	**700-410**		
C25 (689)	91-97	**700-410**	-	
CV25 (689)	1990	**700-410**	-	
F25 (61N)	98-05	**700-415**	-	
T25 (66T)	01-05	**700-415**		
30 (689) A4	84-85	**700-410**	-	
30 (689) A6	86-92	**700-410**	-	
30 (6J8)	87-02	**700-415**		
C30 (689)	90-92	**700-410**	-	
CV30 (689)	89-90	**700-410**	-	
F30 (66T)	01-05	**700-415**		
40 (6H4)	84-94	**700-415**	**725-415**	
40 (63D)	95-04	**700-420**		
C40 (6F5)	90-94	**700-440**		
C40 (6R6)	90-95	**700-440**		
C40 (679)	92-97	**700-440**		
C40 (63D)	97-02	**700-420**		-
CV40 (6F5)	90-94	**700-440**		
F40 (63D)	1999	**700-420**		
F40 (67F) JET DRIVE	02-03	**700-445**		
F40 (66T)	00-05	**700-415**		
P40 (63D)	1998	**700-420**		
F40 (2.6L)	1999	**700-420**		
50 (6H4)	86-94	**700-415**	**725-415**	
50 (63D)	95-04	**700-420**		
C50 (63D)	99-01	**700-420**		
F50 (63D)	99-Up	**700-420**		
F50 (67F) JET DRIVE	02-03	**700-445**		
PRO 50 (6H4)	87-94	**700-415**	**725-415**	
P50 (6H4)	91-93	**700-415**	**725-415**	
P50 (63D)	95-96	**700-420**		
50 (JET)	86-89	**700-415**	-	
T50 (6H3)	96-02	**700-420**		
C55, CV55 (663)	89-95	**700-420**		
P60 (6H3)	91-99	**700-420**		
C60 (6H3)	92-01	**700-420**		
E60 (6H3)	95-96	**700-420**		
E60 (6K5)	97-00	**700-420**	-	
F60 (63D)	02-05	**700-420**		
F60 (67F) JET DRIVE	04-05	**700-445**		
T60 (6H3)	03-05	**700-420**		

PRECISION
Arizona • 1-800-977-1414
480-966-1550 • fax 480-966-1565
16441 N. 91St. Suite 105 Scottsdale, AZ 85260
Florida • 1-866-417-4072
941-238-0960 • fax 941-238-0965
1899 60th Place East, Bradenton, FL 34203
e-mail: info@wsmparts.com • www.wsmparts.com
VISA MasterCard AMERICAN EXPRESS DISCOVER NOVUS

Impeller Kits
Application Chart

HP	Year	Impeller	Service Kit	Complete Kit
P60 (6H3)	91-99	700-420		
70 (6H3)	84-03	700-420		
C70 (6H3)	00-01	700-420		
C75 (692)	94-99	700-425		
E75 (692)	95-96	700-425		
E75 (692)	97-00	700-425		
F75 (67F)	03-11	700-445		
P75 (692)	96-99	700-425		
C80 (692)	1997	700-425		
CV85 (692)	89-90	700-425		
C85 (692)	91-96	700-425		
F80 (67F)	99-03	700-445		
90 (692)	84-05	700-425		
90 (JET)	86-89	700-425	-	
C90 (692)	97-Up	700-425		
B90 (692)	98-99	700-425		
F90 (67F)	03-05	700-445		
F100 (67F)	99-02	700-445		
F115/LF115 (68V)	00-05	700-430		
115 (6E5)	84-92	700-430		
115 (6N6)	93-95	700-430	725-431	750-431
C115 (6E5)	91-92	700-430		
C115 (6N6)	93-01	700-430	725-431	750-431
P115 (6N6)	93-96	700-430	725-431	750-431
130 (6E5)	88-92	700-430		
130 (6N6)	93-01	700-430		
L130 (6E5)	89-92	700-430		
L130 (6N6)	93-96	700-430	725-431	750-431
C150 (61A)	1996	700-430	725-433	750-433
C150 (61A)	98-99	700-430	725-433	750-433
L150 (6G5)	86-91	700-430	725-432	
L150 (61A)	92-99	700-430	725-433	750-433
P150 (6N9)	92-99	700-430	725-433	750-433
150 (6G5)	85-91	700-430	725-432	
150 (61A)	92-05	700-430	725-433	750-433
PX150 (61A)	1999	700-430	725-433	750-433
SX150 (61A)	99-04	700-430	725-433	750-433
V150 (64L)	00-05	700-430	725-433	750-433
PRO V 150 (6G5)	86-89	700-430	725-432	
PRO V150D (6G5)	90	700-430	725-432	
VX150 (61A)	01-03	700-430	725-433	750-433
VZ150 (61A)	00-05	700-430	725-433	750-433
Z150/LZ150 (61A)	00-05	700-430	725-433	750-433
175 (6G5)	85-91	700-430	725-432	
175 (61A)	92-00	700-430	725-433	750-433
P175 (61A)	94-96	700-430	725-433	750-433
P175 (64L)	97-99	700-430	725-433	750-433
Z175 (61A)	01-05	700-430	725-433	750-433
VZ175 (61A)	01-05	700-430	725-433	750-433
200 (6G5)	84-91	700-430	725-432	
200 (61A)	92-98	700-430	725-433	750-433
55F200/LF200 (61A)	02-05	700-430	725-433	750-433
L200 (6G5)	86-91	700-430	725-432	
L200 (61A)	92-99	700-430	725-433	750-433
LX200 (61A)	99-01	700-430	725-433	750-433

New York • 1-800-222-3375
631-244-8060 • fax 631-244-0556
61 Floyd Run, Bohemia, NY 11716
Puerto Rico
787-832-2499 • fax 787-832-2939
234 Balboa St., Mayaquez, Puerto Rico 00681-2605
e-mail: info@wsmparts.com • www.wsmparts.com

Impeller Kits
Application Chart

HP	Year	Impeller	Service Kit	Complete Kit
P200 (61A)	91-96	700-430	725-433	750-433
P200 (64L)	97-99	700-430	725-433	750-433
SX200 (61A)	99-05	700-430	725-433	750-433
V200 (65L)	98-99	700-430	725-433	750-433
VZ200 (61A)	01-05	700-430	725-433	750-433
VZ200 3.3L	2005-10	700-430		
Z200/LZ200 (61A)	00-05	700-430	725-433	750-433
V6 SPECIAL (6G5)	84-86	700-430	725-432	
V6 EXCEL (6G5)	87-89	700-430	725-432	
225 (6G5)	90-91	700-430	725-432	
225/L225 (61A)	92-96	700-430	725-433	750-433
L225/S225 (65L)	97-99	700-430	725-433	750-433
F225/LF225 (61A)	02-05	700-430	725-433	750-433
LX225/SX225 (65L)	00-03	700-430	725-433	750-433
V225 (65L)	98-99	700-430	725-433	750-433
VX225 (65L)	00-01	700-430	725-433	750-433
VX225 (61A)	02-04	700-430	725-433	750-433
F225 4 Stroke	07-Up	700-430		
250/L250 (61A)	90-96	700-430	725-433	750-433
L250/S250 (65L)	97-99	700-430	725-433	750-433
VX250 (61A)	02-04	700-430	725-433	750-433
F250 4 Stroke	06-Up	700-430		
3.3 Liter	03-Up	700-430		
F225HP 4 Stroke	07-Up	700-430		
F250HP 4 Stroke	06-Up	700-430		

Water Pump Sleeve Kit

WATER PUMP SLEEVE KIT
Part No. 770-100K

Cooling System Parts

Part No. 770-100
O.E. No. 61A-45538-00
Water Pump HSG.
Plastic Sleeve

Part No. 770-105
O.E. No. 61A-45527-00
Water Pump HSG.
CUP,S/S

Part No. 770-110
O.E. No. 90201-22M01-00-00
Water Pump HSG.
Washer,S/S

Part No. 770-115
O.E. No. 90206-22M19
Water Pump HSG.
Washer,Wave

PRECISION
Arizona • 1-800-977-1414
480-966-1550 • fax 480-966-1565
16441 N. 91St. Suite 105 Scottsdale, AZ 85260
Florida • 1-866-417-4072
941-238-0960 • fax 941-238-0965
1899 60th Place East, Bradenton, FL 34203
e-mail: info@wsmparts.com • www.wsmparts.com

Thermostats

Yamaha Thermostat
Part No. 775-200
Fits: 2-3 Cyl., V4 / V6,
50 Celsius
O.E. No. 6E5-12411-30-00

Yamaha Thermostat
Part No. 775-210
Fits: 75-300 HP 4 Stroke,
50 Celsius
O.E. No. 60V-12411-00-00

Yamaha Thermostat
Part No. 775-220
Fits: F75-F225 60 Celsius
O.E. No. 67F-12411-01-00

Yamaha Thermostat
Part No. 775-225
Fits: 300-350 2006-2014
O.E No. 6AW-12411-00-00

Yamaha Thermostat
Part No. 775-205
Fits: 9.9-60 HP 85-04
60 Celsius
O.E. No. 66M-12411-01-00

Ignition Coils

Part No. 380-5110
O.E. No. 697-85570-11-00

Part No. 380-5112
O.E. No. 6E7-85570-19-00,
680-85570-09-00

Part No. 380-5113
O.E. No. 6F5-85570-01-00

Part No. 380-5128
O.E. No. 6R3-85570-01-00

Application Chart

H.P.	Years	Part No.	OEM No.
9.9/15	83-93	**380-5112**	6E7-85570-19-00 680-85570-09-00
15-20 (4 Stroke)		**380-5113**	6F5-85570-01-00
55	89-94	**380-5110**	697-85570-11-00
115(4CYL)	85-91	**380-5110**	6E5-85570-11-00
115/130/150	94-04	**380-5128**	6R3-85570-01-00
B115	98-99	**380-5128**	6R3-85570-01-00
C115	97-98	**380-5128**	6R3-85570-01-00
175	94-95/ 97-98/00	**380-5128**	6R3-85570-01-00
200	94-98	**380-5128**	6R3-85570-01-00
225	97	**380-5128**	6R3-85570-01-00

New York • 1-800-222-3375
631-244-8060 • fax 631-244-0556
61 Floyd Run, Bohemia, NY 11716
Puerto Rico
787-832-2499 • fax 787-832-2939
234 Balboa St., Mayaquez, Puerto Rico 00681-2605
e-mail: info@wsmparts.com • www.wsmparts.com

Protorque Starters

Part No. PH130-0074
O.E. No. 69J-81800-00-00
Fits: 4 Stroke 200-250 HP 2002-Up

Part No. PH130-0061
O.E. No. 6L2-, 682-81800-12
Fits: 9.9-25 HP 1984-98 (10 tooth)

Part No. PH130-0029
O.E. No. 66M-, 65W-81800-00
Fits: 9.9HP 4 Stroke 2005 (9 tooth),
15HP 4 Stroke 98-99,
25HP 4 Stroke 98-04

Part No. PH130-0049
O.E. No. 689-81800-13
Fits: 25-40 HP 84-97 (11 tooth)

Part No. PH130-0028
O.E. No. 67C-81800-00
Fits: 30-40 HP 4 Stroke 2000-Up (9 tooth)

Part No. PH130-0063
O.E. No. 6H4-81800-10, -11, -12
Fits: 40-50 HP (9 tooth)

Part No. PH130-0062
O.E. No. 6J4-, 6F5-81800-10
Fits: 30-50 HP 1985-Up (11 tooth)

Part No. PH130-00073
O.E. No. 697-81800-12
Fits: 40-60 HP 2 Cyl. 91-95 (9 tooth)

Part No. PH130-0050
O.E. No. 6H3-81800-10, -11
Fits: 60-70 HP 84-08 (9 tooth)

PRECISION
Arizona • 1-800-977-1414
480-966-1550 • fax 480-966-1565
16441 N. 91St. Suite 105 Scottsdale, AZ 85260
Florida • 1-866-417-4072
941-238-0960 • fax 941-238-0965
1899 60th Place East, Bradenton, FL 34203
e-mail: info@wsmparts.com • www.wsmparts.com

Protorque Starters

Part No. PH130-0058
O.E. No. 688-81800-10, -11, -12
Fits: 75-90 HP 84-08 (9 tooth)

Part No. PH130-0055
O.E. No. 67F-81800-00, -01, -02
Fits: 75-100 HP 4 Stroke 99-04 (13 tooth)

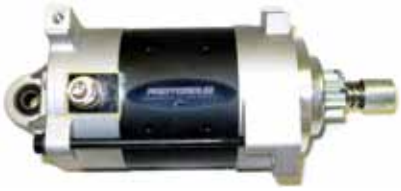

Part No. PH130-0051
O.E. No. , 6N7-, 6K7-81800-10
Fits: 2 Stroke 115-250 HP 97-99 (9 tooth)

Part No. PH130-0005
O.E. No. 6E5-81800-11, -12
Fits: 115-200 HP 1984-02 (9 tooth)

Part No. PH130-0057
O.E. No. 68V-81800-00, -01
Fits: 115 HP 4 Stroke 00-08 (13 tooth)

Part No. PH130-0056
O.E. No. 68F-81800-00, -01, -02
Fits LZ, VZ, Z 150-200 HP 00-08 (13 tooth)

Part No. PH130-0059
O.E. No. 69L-, 61A-81800-00
Fits: 200-250 HP 87-05 (9 tooth)

Part No. PH130-0073
O.E. No. 6BR-81800-01-00
Fits: F150, F225, F250

Part No. PH130-0082
O.E No. 69W-81800-00-00
Fits: 50, 60 Hp 4-Stroke

Starters Solonoids

Part No. PH375-0034
O.E. No. 65W-81941-00-00
Fits: 25-40 HP 1998-up

Part No. PH375-0041
O.E. No. 6G1-81941-10-00
Fits: 25-90HP 1995-UP

Part No. PH375-0042
Fits: 2002-2007 Yamaha models and various other Marine applications. Replaces Yamaha 68N-81940-00

New York • 1-800-222-3375
631-244-8060 • fax 631-244-0556
61 Floyd Run, Bohemia, NY 11716
Puerto Rico
787-832-2499 • fax 787-832-2939
234 Balboa St., Mayaquez, Puerto Rico 00681-2605
e-mail: info@wsmparts.com • www.wsmparts.com

Protorque Trim Motors

1987-1995 115-200HP
O.E. No. 6G5-43880-02-00
Part No. PH200-T030

2 Wire 3 Bolt 40-90Hp
O.E. No. 6H1-43880-02-00
Part No. PH200-T029

4wire 3 Bolt V6 76 Degree 225-250HP
O.E. No. 61A-43880-02-00
Part No. PH200-T050

4 Bolt 2 Wire 1997-2002
O.E. No. 64E-43880-01-00
Part No. PH200-T057

2 Wire With Relay Harness 68.3mm
Flange O.E. No. 6G5-43880-01-00
Part No. PH200-T047 2mm blade

2 Wire With Relay Harness 70.5mm
Base O.E. No. 6H1-43880-00-00
Part No. PH200-T041

F150 2011-Up
O.E No. 63P-43880-11-00
Part No. PH200-T075

40-50 HP 1995-2003
O.E. No. 62X-43880-09-00
Part No. PH200-T035

40-50 HP 1985-1992
O.E. No. 6H5-43880-02-00
Part No. PH200-T048

4-Stroke 40-50 HP
O.E. No. 62Y-43880-01-00
Part No. PH200-T036

4 Bolt 2 Wire Motor
(Shaft Length .630)
Fits: F75-F90 2000-01
F75-F90HP 2005-UP
O.E. No. 6D8-43880-09-00
6D8-43880-00-00
Part No. PH200-T068

PRECISION
Arizona • 1-800-977-1414
480-966-1550 • fax 480-966-1565
16441 N. 91St. Suite 105 Scottsdale, AZ 85260
Florida • 1-866-417-4072
941-238-0960 • fax 941-238-0965
1899 60th Place East, Bradenton, FL 34203
e-mail: info@wsmparts.com • www.wsmparts.com

Protorque Trim Motors

2 Wire Motor With Harness Mounting Flange 68.3mm 4mm Thick Flat Blade 50-200HP O.E. No. 6E5-43880-01-00 And 688-43880-11-00

Part No. PH200-T037

12 Volt 2 Wire Motor 3 Bolt Mount
Fits: F50-F60 2005-2009
O.E. No. 6C5-43880-01-00
Includes O-Ring

Part No. PH200-T045

12 Volt 2 Wire Motor 3 Bolt Mount
Fits: F200-F250, LF200-LF250, LZ250, LZ300 & Z250,Z300
O.E. No. 69J-43880-00-00

Part No. PH200-T069

12 Volt 2 Wire Motor 4 Bolt Mount
Fits: 4 Stroke F80 & F100 1999-2003 & F75-F90 03-04
O.E. No. 67F-43880-00-00

Part No. PH200-T044

Trim Harness W/Relays

Part No. PH200-WH01

Fits: 25-40Hp 2&4 Strokes 2001-2012
O.E No 67C-43880-00-00, 01-00

Part No. PH200-T073

Fits: 25-250 Hp 1990-2010
O.E No. 61A-81950-00-00

Part No. 343-510

Trim Switch
O.E No.703-82563-02-00

Part No. 905-100

New York • 1-800-222-3375
631-244-8060 • fax 631-244-0556
61 Floyd Run, Bohemia, NY 11716

Puerto Rico
787-832-2499 • fax 787-832-2939
234 Balboa St., Mayaquez, Puerto Rico 00681-2605

e-mail: info@wsmparts.com • www.wsmparts.com

Protorque Trim Relay

Part No. PH375-0047
O.E. No.: 6E5-81950-01-00

Part No. PH375-0048
O.E. No.: 6E5-8195A-00-00
6E5-8195A-01-00

Thermosensor

Part No. 004-292
O.E. No.61A-85790-00-00
Thermosensor ASY

Regulator / Rectifier

004-283 Voltage Regulator
O.E. No. 68V-81960-00-00,
6D3-81960-00-00
Fits: 60-115Hp 4 Strokes

365-1960 Voltage Regulator
O.E. No. 67F-81960-10,11,12
Fits: 75-90Hp 4 Strokes

PH350-0005 Rectifier
O.E. No. 6G5-81960-A0-00
Fits: 75-200 Hp

PRECISION
Arizona • 1-800-977-1414
480-966-1550 • fax 480-966-1565
16441 N. 91St. Suite 105 Scottsdale, AZ 85260
Florida • 1-866-417-4072
941-238-0960 • fax 941-238-0965
1899 60th Place East, Bradenton, FL 34203
e-mail: info@wsmparts.com • www.wsmparts.com

STARTER BRUSH LOADING TOOL

Part No. PH365-0008

Perfect tool for loading outboard starter brushes. Fits most starter caps.

SPARK PLUG GAP GAUGE

Part No. 990-345

IGNITION WIRE PULLER

Part No. 996-190

Non-metallic. No shock.

UNIVERSAL HEAT SHRINK ASSORTMENT

Part No. 014-1040

FEELER GAUGE

Part No. 990-230

UNIVERSAL WIRE TERMINAL KIT

Part No. 014-1050

WIRE BRUSH SET (3 PCS)

Part No. 990-300

9″

WIRE BRUSH SET (3 PCS)

Part No. 990-300-01

7″

HD BATTERY TERMINAL CRIMPER

Part No. 996-200

Use on Battery Terminal/Lugs. Designed to crimp large, heavy duty cable terminals. Welded plate construction for long life. Easy to read crimp depth scales on both sides of the punch. To operate, set up cable and strike punch with a hammer or mallet. (Always use safety glasses). Weight 2 lbs.

New York • 1-800-222-3375
631-244-8060 • fax 631-244-0556
61 Floyd Run, Bohemia, NY 11716
Puerto Rico
787-832-2499 • fax 787-832-2939
234 Balboa St., Mayaquez, Puerto Rico 00681-2605
e-mail: info@wsmparts.com • www.wsmparts.com

IMPACT DRIVER SET (12 PCS)
Part No. 990-210

IMPACT DRIVER SET LONG NOSE
Part No. 990-215

BLIND HOLE BEARING PULLER
Part No. 990-360

BEARING RACE & SEAL DRIVER KIT
Part No. 990-355

MICRO AIR GRINDER
Part No. 990-200

Slim (approx. 5/8" diameter) aluminum body and 56,000 RPM (variable speed) make this handpiece ideal for precision work. Comes in a clear top case. Includes oil, collet and mount and demount wrenches.

L.E.D. INSPECTION LIGHT
Part No. 996-115

Aluminum body with L.E.D. light means long trouble free operation (no bulb to burn out). Flexible stem is 300mm long. Uses CR-2032 battery (included).

4 PIECE SNAP RING PLIER SET
Part No. 990-105

Fits: 10-50mm / 3/8"- 2"

PICK SET (4 PCS)
Part No. 990-310

SPRING PULLER
Part No. 990-340

T-HANDLE HEX KEY SET METRIC (10 PCS)
Part No. 990-245

PRECISION
Arizona • 1-800-977-1414
480-966-1550 • fax 480-966-1565
16441 N. 91St. Suite 105 Scottsdale, AZ 85260
Florida • 1-866-417-4072
941-238-0960 • fax 941-238-0965
1899 60th Place East, Bradenton, FL 34203
e-mail: info@wsmparts.com • www.wsmparts.com

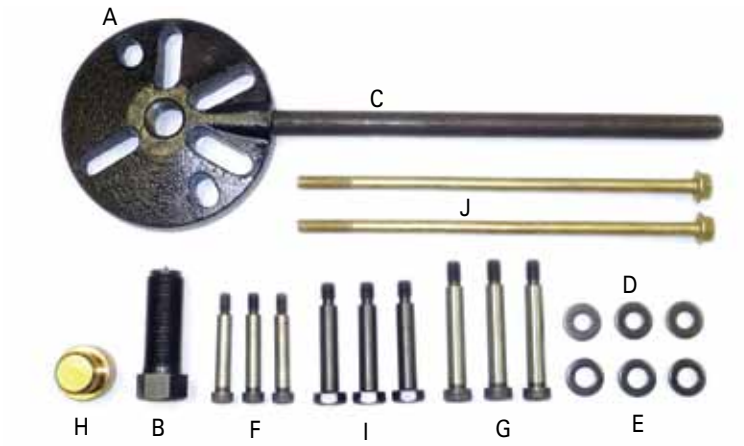

UNIVERSAL PULLER KIT

Part No. 985-125K

Removes flywheels, lower main bearings, and gearcase heads. Set consists of these separately available components.

Fig.	Part No.	Description
A	**985-125-01**	Puller Body
B	**985-125-05**	Pressing Screw
C	**985-125-09**	Handle
D	**985-125-02**	Washers (3) 11/32
E	**985-125-03**	Washers (3) 13/32
F	**985-125-06**	(3), 1/4-20x2 1/8
G	**985-125-07**	(3), 5/16-18 x 2-3/4
H	**985-125-04**	Guide
I	**985-125-08**	(3), 5/16-24 x 2-7/16
J	**985-125-10**	(2), 5/16-18 x 8 in

OMC LIFTING EYE

Part No. 985-135

For all models that need a straight lift from the crankshaft centerline. Use with components of Universal Puller Kit 985-125K

MERCURY FLYWHEEL PULLER

Part No. 985-145

Fits 2 Cyl. 35 & 40 HP, 4 Cyl. 45 & 50 HP, 3 Cyl 50-75 HP, 4 Cyl 75-125 HP, all 6 cyl. inline engines and all V-6 Engines.

MERCURY LIFTING EYE

Part No. 985-150

Fits 2 cyl. 35 & 40 HP, 4 cyl. 45 & 50 hp, 3 cyl. 50-70, 4 cyl. 75-80 HP. All 6 cyl. inlines and all V6.

JOHNSON / EVINRUDE /BRP 60 DEGREE LIFTING EYE

Part No. 985-160

O.E. No. 342672

OMC LIFTING EYE

Part No. 985-155

A tool for saving labor. Easy to install. Lifts engine in a vertical position. Allows one person to install motor. Johnson- Evinrude V4 & V6.

VERADO FLYWHEEL PULLER

Part No. 985-175

O.E. No. 895343T02

UNIVERSAL FLYWHEEL PULLER

Part No. 985-140

Heavy duty. 1/2" thick plate. 1" dia. fine threaded push rod with built in center. No need for flywheel holder. comes with six 5/16" fine thread bolts.

New York • 1-800-222-3375
631-244-8060 • fax 631-244-0556
61 Floyd Run, Bohemia, NY 11716
Puerto Rico
787-832-2499 • fax 787-832-2939
234 Balboa St., Mayaquez, Puerto Rico 00681-2605
e-mail: info@wsmparts.com • www.wsmparts.com

Stands

HEAVY DUTY ADAPTER FLOOR STAND

Part No. 980-100L

WT. 39 LBS. A variety of popular engine adapters fit into the I.D. of this stand. Base 1/4" thick X 18"X18" and 30" high. Utilizes two 1/ 2 - 13 threaded set screws with sturdy handle. 1" wide set ring also included. Four holes will accept 1/2" lags.

VERTICAL TO HORIZONTAL ADAPTER

Part No. 980-105L

Allows positioning of normally horizontal adapters to be used in the Floor Stands.

BENCH STAND ADAPTER

Part No. 980-110L

A variety of popular engine adapters fit into the I.D. of this stand. 1/2-13 screw with sturdy handlle holds adapters in place. Four holes will accept 3/8" bolts.

ADJUSTABLE LOWER UNIT ADAPTER

Part No. 980-120L

Adjustable width allows you to handle all outdrives from small motors to V-8's. 18" arms provide full support and are padded to prevent marring. Includes clamps, bolts and sturdy handle for tightening of various widths.

Fuel *Tools*

4 CYLINDER CARBURETOR SYNCHRONIZER SET

Part No. 999-250

4 cyl. Gauge reading: 0 to 76cm/hg in 2" Gauge with Fixed Plate. Individual damping on each gauge. Comes with four 5mm X 170mm adaptors, four 5mm X 100mm adaptors, four 6mm X 60mm adaptors, spare o-rings and an adaptor to lengthen your hoses by hooking them to each other.

6 CYLINDER CARBURETOR SYNCHRONIZER SET

Part No. 999-255

MERCURY FUEL FILTER TOOL

Part No. 999-100

OE Part No. 91-896661
Removes & Installs Mercury DFI fuel filters

CARB CLEANER WIRE SET

Part No. 990-330

PRECISION
Arizona • 1-800-977-1414
480-966-1550 • fax 480-966-1565
16441 N. 91St. Suite 105 Scottsdale, AZ 85260
Florida • 1-866-417-4072
941-238-0960 • fax 941-238-0965
1899 60th Place East, Bradenton, FL 34203
e-mail: info@wsmparts.com • www.wsmparts.com

I/O / Lower Unit *Tools*

GIMBAL BEARING PULLER AND PRESSURE PLATE UNIT

Part No. 983-300

Comes with plate to accommodate both Mercruiser and the OMC Cobra Bell Housing. Two thrust races and a bearing separate the pressure plate and the tensioning nut. A guide pin is welded to the puller and slides through the pressure plate. This allows you to expand the front of the puller without putting your hand or a wrench inside the Bell Housing. This Blind Hole puller has three 120 deg. segments that fit into and lock onto the inner race of the Gimbal Bearing for easy removal. Spacer allows for 360 deg. wrench rotation.

SHIFT SNAKE SHIFT CABLE INSTALLER

Part No. 983-140

Simply screw swivel male threads into existing cable and pull old cable out. Remove old cable and thread new cable onto shift snake and pull it back thru. Plastic coated cable 5 feet long. A real time saver.

GIMBAL BEARING INSTALLER

Part No. 983-310

Used in conjunction with the 18-4442 to install the Gimbal Bearing.

GIMBAL HOUSING WRENCH

Part No. 983-325

PINION NUT HOLDER

Part No. 983-120

O.E. No. 334455
Holds Pinion Nut - OMC V4, V6, V8, counter rotation and standard.

New York • 1-800-222-3375
631-244-8060 • fax 631-244-0556
61 Floyd Run, Bohemia, NY 11716
Puerto Rico
787-832-2499 • fax 787-832-2939
234 Balboa St., Mayaquez, Puerto Rico 00681-2605
e-mail: info@wsmparts.com • www.wsmparts.com

Lower Unit *Tools*

BEARING CARRIER PULLER

Solid one piece construction. Pulls carrier straight out without catching or binding. Fast, efficient, very resistant to abuse. Will outlast any tool for this job.

Part No.	Fits
983-225	Merc-CruiserAlpha 1, Merc V-6 OB. Alpha Generation II 93 & up, 3 liter 94 & up, Merc TRS OMC V6 OB, Yam V6 OB up to 225 HP, Suz V6 OB
983-245	Yamaha 70-115 OB

PRESSURE/ VACUUM TESTER

Part No. 995-175K

COMBINATION UNIT - TWO TESTERS IN ONE! Test pressure and vacuum with one unit. Includes standard adapter, hose and case. Metal construction.

HINGE PIN TOOL

Part No. 983-165

O.E. No. 91-78310
Splined tool to remove hinge pins.

DRIVESHAFT PULLERS

Part No.983-195

O.E.No. 390706
Fits: OMC V4, V6, V8

TILT TUBE REAMER

Part No. 986-600

TILT TUBE BRUSH

Part No. 986-605

PRECISION
Arizona • 1-800-977-1414
480-966-1550 • fax 480-966-1565
16441 N. 91St. Suite 105 Scottsdale, AZ 85260
Florida • 1-866-417-4072
941-238-0960 • fax 941-238-0965
1899 60th Place East, Bradenton, FL 34203
e-mail: info@wsmparts.com • www.wsmparts.com

Lower Unit *Tools*

TRIM AND TILT CYLINDER WRENCH

Each wrench has three replaceable pins (please specify which wrench you have when ordering replacement pins).

Part No.	Model
983-401	Mercruiser
983-403-01	Johnson/Evin
983-403	OMC/Yamaha
983-404	Merc Tilt
983-405	Merc Trim
983-406	Yamaha Tilt
983-407	Yamaha Trim

UNIVERSAL TRIM WRENCH

Part No. 983-415

Kit Contains pin sizes .150, .187, .220 and .250

Comes with .210" dia (983-502) Pins

Fits: Mercruiser

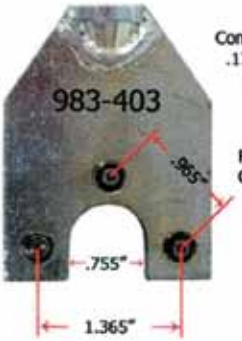

Comes with .170" dia (983-501) Pins

Fits: OMC / Yamaha

Comes with .210" dia (983-502) Pins

Fits: Mercury Tilt

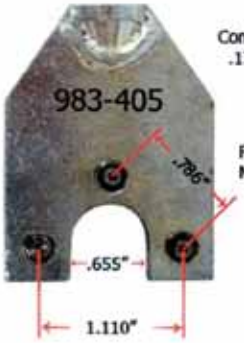

Comes with .170" dia (983-501) Pins

Fits: Mercury Trim

Comes with .158" dia (983-500) Pins

Fits: Yamaha Tilt

Comes with .158" dia (983-500) Pins

Fits: Yamaha Trim

New York • 1-800-222-3375
631-244-8060 • fax 631-244-0556
61 Floyd Run, Bohemia, NY 11716

Puerto Rico
787-832-2499 • fax 787-832-2939
234 Balboa St., Mayaquez, Puerto Rico 00681-2605

e-mail: info@wsmparts.com • www.wsmparts.com

Lower Unit *Tools*

Thread Chaser

Replacement Nut

Thread Chaser Nut Tool

THREAD CHASERS

To accommodate the Bearing Carrier Retainer Nuts. Finally a tool to clean out those corroded damaged threads. Made of heat treated high grade tool steel.

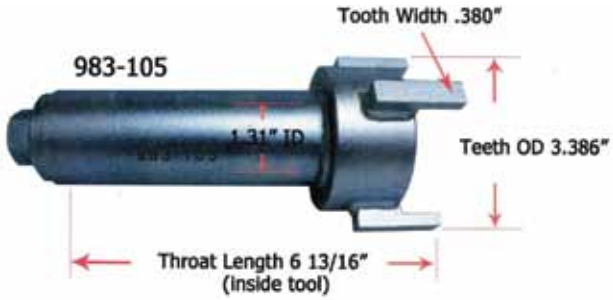

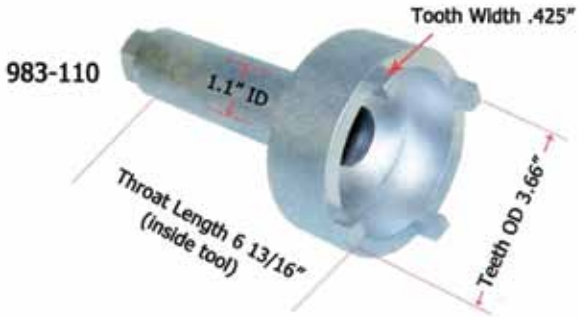

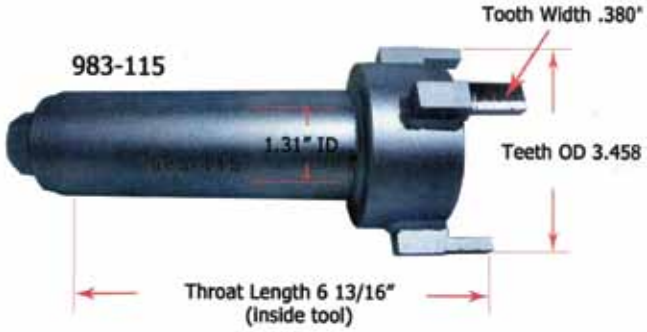

Part No.	Description
MERCURY 4" GEAR HOUSING	
982-105	Thread Chaser
984-105	Replacement Nut O.E. No.52699
983-105	Thread Chaser / Nut Tool
MERCURY 4.375" GEAR HOUSING	
982-110	Thread Chaser
445-226	Replacement Nut O.E.No. 8M2011027
983-110	Thread Chaser / Nut Tool
VOLVO SX	
982-125	Thread Chaser

Part No.	Description
YAMAHA 40-50HP WITH 79MM GEAR	
982-100	Thread Chaser
984-100	Replacement Nut O.E. No. 697-45384-00
983-100	Thread Chaser Adaptor*
YAMAHA 60-130HP WITH 101MM GEAR HOUSING	
982-115	Thread Chaser
984-115	Replacement Nut O.E. No. 688-45384-00
983-115*	Thread Chaser / Nut Tool
YAMAHA V6 WITH 111MM GEAR HOUSING	
982-120	Thread Chaser
984-120	Replacement Nut O.E. No. 6G5-45384-00
983-110*	Thread Chaser / Nut Tool

** Tool will fit both thread chaser and Nut*

YAMAHA F300 & F350 V8 5.3 LITER	
984-125	Replacement Nut O.E. No. 6AW-45384-00-00
YAMAHA F200-F300 V6 4.2 LITER	
984-130	Replacement Nut O.E. No. 6CB-45384-00-00

PRECISION
Arizona • 1-800-977-1414
480-966-1550 • fax 480-966-1565
16441 N. 91St. Suite 105 Scottsdale, AZ 85260
Florida • 1-866-417-4072
941-238-0960 • fax 941-238-0965
1899 60th Place East, Bradenton, FL 34203
e-mail: info@wsmparts.com • www.wsmparts.com

INDEX

A

Alternators, Honda ---- 45
Alternators, I/O ---- 14-22
Alternators, Mercury ---- 176

B

Battery Terminal Crimper, HD ---- 247
Bearing Carrier Puller ---- 252
Bearing Race & Seal Driver Kit ---- 248
Bearings, Chrysler/Force ---- 30-31
Bearings, Johnson/Evinrude ---- 72-76
Bearings, Mercury ---- 136-142
Bearings, Nissan/Tohatsu ---- 191
Bearings, Yamaha ---- 212-214
Blind Hole Bearing Puller ---- 248
Block Offs, Oil Injection, Mercury ---- 135
Bolt Kits, Johnson/Evinrude ---- 70

C

Carburetor Cleaner Wire Set ---- 250
Carburetor Kits, Johnson/Evinrude ---- 92-93
Carburetor Kits, Mercury ---- 161-163
Carburetor Kits, Nissan/Tohatsu ---- 191
Carburetor Kits, Yamaha ---- 227-230
Carburetor Synchronizer Set ---- 250
Chrysler Fuel Pump, I/O ---- 7
Chrysler/Force Bearings ---- 30-31
Chrysler/Force Connecting Rod ---- 30
Chrysler/Force Drain Plug Gasket Kit ---- 40
Chrysler/Force Engine Rebuild Kits ---- 27-28
Chrysler/Force Impellers ---- 38-39
Chrysler/Force Piston Kits ---- 29
Chrysler/Force Power Head Gasket Kits ---- 32-37
Chrysler/Force Rod Bolt ---- 30
Chrysler/Force Solenoids ---- 44
Chrysler/Force Spark Plug Boots ---- 44
Chrysler/Force Spark Plug Terminals ---- 44
Chrysler/Force Spark Plug Wires ---- 44
Chrysler/Force Starters ---- 42-43
Chrysler/Force Thermostats ---- 40
Chrysler/Force Trim Motors ---- 41
Chrysler/Force, Tilt Tube Parts ---- 40
Clamps, Hose ---- 2
Clamps, Oetiker ---- 1
Com-End Kits, Mercury ---- 182
Connecting Rod Bolt, Chrysler/Force ---- 30
Connecting Rod Bolts, Johnson/Evinrude ---- 71
Connecting Rod Bolts, Mercury ---- 134-135
Connecting Rod Bolts, Yamaha ---- 211
Connecting Rod, Chrysler/Force ---- 30
Connecting Rods, Johnson/Evinrude ---- 71
Connecting Rods, Mercury ---- 134-135
Connecting Rods, Yamaha ---- 211
Crankshafts, Johnson/Evinrude ---- 70
Crankshafts, Mercury ---- 134
Crankshafts, Yamaha ---- 211
Cylinder Sleeve, Johnson/Evinrude ---- 70

D

Drain Plug Gasket Kit ---- 2
Drain Plug Gasket Kit, Chrysler/Force ---- 40
Drain Plug Gasket Kit, Honda ---- 48
Drain Plug Gasket Kit, Johnson/Evinrude ---- 96
Drain Plug Gasket Kit, Mercury ---- 169
Drain Plug Gasket Kit, Nissian/Tohatsu ---- 192
Drain Plug Gasket Kit, Suzuki ---- 198
Drain Plug Gasket Kit, Yamaha ---- 236
Driveshaft Puller ---- 252

E

E-Tec Fuel Injector Repair Kit, Johnson/Evinrude ---- 93
Engine Rebuild Kits, Chrysler/Force ---- 27-28
Enginer Rebuild Kits, Johnson/Evinrude ---- 49-54
Enginer Rebuild Kits, Mercury ---- 109-116
Enginer Rebuild Kits, Yamaha ---- 199-204

F

Feeler Gauge ---- 247
Flywheel Puller, Mercury ---- 249
Flywheel Puller, Universal ---- 249
Flywheel Puller, Verado ---- 249
Fuel / Water Separators ---- 3-5
Fuel / Water Separators, Honda ---- 47
Fuel / Water Separators, Johnson/Evinrude ---- 95
Fuel / Water Separators, Yamaha ---- 233
Fuel Filter Tool, Mercury ---- 250
Fuel Filters, Honda ---- 47
Fuel Filters, Johnson/Evinrude ---- 95
Fuel Filters, Mercury ---- 166
Fuel Filters, Suzuki ---- 194
Fuel Filters, VST ---- 13
Fuel Filters, Yamaha ---- 232
Fuel Pump, Chrysler, I/O ---- 7
Fuel Pump, Universal ---- 2
Fuel Pumps, Johnson/Evinrude ---- 94
Fuel Pumps, Mercruiser ---- 8-11

VISA MasterCard AMERICAN EXPRESS DISCOVER NOVUS

New York • 1-800-222-3375
631-244-8060 • fax 631-244-0556
61 Floyd Run, Bohemia, NY 11716

Puerto Rico
787-832-2499 • fax 787-832-2939
234 Balboa St., Mayaquez, Puerto Rico 00681-2605

e-mail: info@wsmparts.com • www.wsmparts.com

WSM PERFORMANCE PARTS

INDEX

Fuel Pumps, Mercury ---------- 164-165
Fuel Pumps, Nissan/Tohatsu ---------- 191
Fuel Pumps, OMC / Volvo ---------- 8-9,12
Fuel Pumps, Suzuki ---------- 194
Fuel Pumps, Yamaha ---------- 231

G

Gasket Kit, Drain Plug ---------- 2
Gasket Kits, Power Head, Chrysler/Force ---------- 32-37
Gasket Kits, Power Head, Johnson/Evinrude ---------- 77-91
Gasket Kits, Power Head, Mercury ---------- 143-161
Gasket Kits, Power Head, Yamaha ---------- 215-226
Gimbal Bearing Installer ---------- 251
Gimbal Bearing Puller & Pressure Plate Unit ---------- 251
Gimbal Bearing Puller, I/O ---------- 26
Gimbal Bearing, I/O ---------- 26
Gimbal Housing Wrench ---------- 251

H

Head Bolts, Mercury ---------- 135
Heat Shrink Assortment, Universal ---------- 247
Hex Key Set, Metric, T-Handle ---------- 248
Hinge Pin Tool ---------- 252
Honda Alternators ---------- 45
Honda Drain Plug Gasket Kit ---------- 48
Honda Fuel Filters ---------- 47
Honda Fuel/Water Separators ---------- 47
Honda Impellers ---------- 48
Honda Oil Filters ---------- 46
Honda Spark Plug Boots ---------- 46
Honda Spark Plug Terminals ---------- 46
Honda Spark Plug Wires ---------- 46
Honda Starters ---------- 45
Honda Thermostats ---------- 48
Honda Trim Motors ---------- 45
Hose Clamps ---------- 2

I

I/O Alternators ---------- 14-22
I/O Gimbal Bearing ---------- 26
I/O Gimbal Bearing Puller ---------- 26
I/O Impeller Kits ---------- 6
I/O Oil Filters ---------- 13
I/O Solenoids ---------- 23
I/O Starters ---------- 23
I/O Trim Motors ---------- 24-26
I/O Water Pumps ---------- 7
Ignition Coils, Johnson/Evinrude ---------- 99
Ignition Coils, Mercury ---------- 187
Ignition Coils, Yamaha ---------- 241
Ignition Wire Puller ---------- 247
Impact Driver Set ---------- 248
Impeller Kits, I/O ---------- 6
Impeller Kits, Mercury ---------- 170-174
Impeller Kits, Yamaha ---------- 237-240
Impellers, Chrysler/Force ---------- 38-39
Impellers, Honda ---------- 48
Impellers, Johnson/Evinrude ---------- 97-98
Impellers, Mercury ---------- 169
Impellers, Nissan/Tohatsu ---------- 192
Impellers, Yamaha ---------- 237

J

Johnson/Evinrude Bearings ---------- 72-76
Johnson/Evinrude Bolt Kits ---------- 70
Johnson/Evinrude Carburetor Kits ---------- 92-93
Johnson/Evinrude Connecting Rod Bolts ---------- 71
Johnson/Evinrude Crankshafts ---------- 70
Johnson/Evinrude Cylinder Sleeve ---------- 70
Johnson/Evinrude Drain Plug Gasket Kit ---------- 96
Johnson/Evinrude E-Tec Fuel Injector Repair Kit ---------- 93
Johnson/Evinrude Engine Rebuild Kits ---------- 49-54
Johnson/Evinrude Fuel Filters ---------- 95
Johnson/Evinrude Fuel Pumps ---------- 94
Johnson/Evinrude Fuel/Water Separators ---------- 95
Johnson/Evinrude Ignition Coils ---------- 99
Johnson/Evinrude Impellers ---------- 97-98
Johnson/Evinrude Oil Filters ---------- 92
Johnson/Evinrude Piston Kits ---------- 55-69
Johnson/Evinrude Power Head Gasket Kits ---------- 77-91
Johnson/Evinrude Power Packs ---------- 108
Johnson/Evinrude Primer Solenoid Parts ---------- 95
Johnson/Evinrude Rectifiers ---------- 107
Johnson/Evinrude Solenoids ---------- 105
Johnson/Evinrude Spark Plug Boots ---------- 107
Johnson/Evinrude Spark Plug Terminals ---------- 107
Johnson/Evinrude Spark Plug Wires ---------- 107
Johnson/Evinrude Starter Brushes ---------- 105
Johnson/Evinrude Starters ---------- 100-104
Johnson/Evinrude Stators ---------- 108
Johnson/Evinrude Thermostats ---------- 99
Johnson/Evinrude Tilt Trim Relay ---------- 105
Johnson/Evinrude Trim Harness ---------- 107
Johnson/Evinrude Trim Motors ---------- 106
Johnson/Evinrude, Tilt Tube Parts ---------- 96
Johson/Evinrude Connecting Rods ---------- 71

PRECISION
Arizona • 1-800-977-1414
480-966-1550 • fax 480-966-1565
16441 N. 91St. Suite 105 Scottsdale, AZ 85260
Florida • 1-866-417-4072
941-238-0960 • fax 941-238-0965
1899 60th Place East, Bradenton, FL 34203
e-mail: info@wsmparts.com • www.wsmparts.com
VISA MasterCard AMERICAN EXPRESS DISCOVER NOVUS

INDEX

L

L.E.D. Inspection Light ---------- 248
Lifting Eye ---------- 249

M

Mercruiser Fuel Pumps ---------- 8-11
Mercury Alternators ---------- 176
Mercury Bearings ---------- 136-142
Mercury Carburetor Kits ---------- 161-163
Mercury Com-End Kits ---------- 182
Mercury Connecting Rod Bolts ---------- 134-135
Mercury Connecting Rods ---------- 134-135
Mercury Crankshafts ---------- 134
Mercury Drain Plug Gasket Kit ---------- 169
Mercury Engine Rebuild Kits ---------- 109-116
Mercury Flywheel Puller ---------- 249
Mercury Fuel Filter Tool ---------- 250
Mercury Fuel Filters ---------- 166
Mercury Fuel Pumps ---------- 164-165
Mercury Head Bolts ---------- 135
Mercury Ignition Coils ---------- 187
Mercury Impeller Kits ---------- 170-174
Mercury Impellers ---------- 169
Mercury Oil Drain Plug Gaskets ---------- 167
Mercury Oil Filters ---------- 167
Mercury Oil Injection Block Offs ---------- 135
Mercury Piston Kits ---------- 117-133
Mercury Poppet Valve Diaphram ---------- 174
Mercury Power Head Gasket Kits ---------- 143-161
Mercury Rectifiers ---------- 190
Mercury Regulators ---------- 190
Mercury Relays ---------- 183
Mercury Solenoids ---------- 183
Mercury Spark Plug Boots ---------- 188
Mercury Spark Plug Terminals ---------- 188
Mercury Spark Plug Wires ---------- 188
Mercury Starter Brush Kit ---------- 182
Mercury Starter Brush Loading Tool ---------- 182
Mercury Starters ---------- 177-182
Mercury Stators ---------- 189-190
Mercury Switch Boxes ---------- 189
Mercury Thermostats ---------- 175
Mercury Tilt Tube Parts ---------- 168
Mercury Trim Motors ---------- 184-186
Mercury VST O-Rings ---------- 165
Mercury Water Pump Housing Sleeve ---------- 174
Mercury Water Pump Housing Sleeve Kit ---------- 174
Mercury Water Pump Housing Washer ---------- 174
Micro Air Grinder ---------- 248

N

Nissan/ Tohatsu Fuel Pumps ---------- 191
Nissan/Tohatsu Bearings ---------- 191
Nissan/Tohatsu Carburetor Kits ---------- 191
Nissan/Tohatsu Drain Plug Gasket Kit ---------- 192
Nissan/Tohatsu Impellers ---------- 192
Nissan/Tohatsu Oil Filters ---------- 191
Nissan/Tohatsu Spark Plug Boots ---------- 193
Nissan/Tohatsu Spark Plug Terminals ---------- 193
Nissan/Tohatsu Spark Plug Wires ---------- 193
Nissan/Tohatsu Starters ---------- 193
Nissan/Tohatsu Thermostats ---------- 192
Nissan/Tohatsu Tilt Tube Parts ---------- 192
Nissan/Tohatsu Trim Harness ---------- 193
Nissan/Tohatsu Trim Motors ---------- 193

O

Oetiker Clamp Pliers ---------- 1
Oetiker Clamps ---------- 1
Oil Drain Plug Gaskets, Mercury ---------- 167
Oil Filters Nissan/Tohatsu ---------- 191
Oil Filters, Honda ---------- 46
Oil Filters, I/O ---------- 13
Oil Filters, Johnson/Evinrude ---------- 92
Oil Filters, Mercury ---------- 167
Oil Filters, Suzuki ---------- 194
Oil Filters, Yamaha ---------- 233
Oil Injection Block Offers, Mercury ---------- 135
OMC / Volvo Fuel Pumps ---------- 8-9,12

P

Pick Set ---------- 248
Pinon Nut Holder ---------- 251
Piston Kits, Chrysler/Force ---------- 29
Piston Kits, Johnson/Evinrude ---------- 55-69
Piston Kits, Mercury ---------- 117-133
Piston Kits, Yamaha ---------- 205-210
Pliers, Oetiker Clamps ---------- 1
Poppet Valve Diaphram, Mercury ---------- 174
Power Head Gasket Kits, Chrysler/Force ---------- 32-37
Power Head Gasket Kits, Johnson/Evinrude ---------- 77-91
Power Head Gasket Kits, Mercury ---------- 143-161
Power Head Gasket Kits, Yamaha ---------- 215-226
Power Packs, Johnson/Evinrude ---------- 108
Pressure & Vacuum Tester Adapter, Suzuki ---------- 197

New York • 1-800-222-3375
631-244-8060 • fax 631-244-0556
61 Floyd Run, Bohemia, NY 11716
Puerto Rico
787-832-2499 • fax 787-832-2939
234 Balboa St., Mayaquez, Puerto Rico 00681-2605
e-mail: info@wsmparts.com • www.wsmparts.com

INDEX

Pressure/Vaccum Tester ---- 252
Primer Solenoid Parts, Johnson/Evinrude ---- 95
Puller Kit, Universal ---- 249

R

Rectifiers, Johnson/Evinrude ---- 107
Rectifiers, Mercury ---- 190
Rectifiers, Yamaha ---- 246
Regulators, Mercury ---- 190
Regulators, Yamaha ---- 246
Relays, Mercury ---- 183

S

Seals, Lower Unit, Individual, Yamaha ---- 235
Separators, Fuel / Water ---- 3-5
Separators, Fuel / Water, Honda ---- 47
Separators, Fuel / Water, Johnson/Evinrude ---- 95
Separators, Fuel / Water, Yamaha ---- 233
Shift Snake Cable Installer ---- 251
Snap Ring Plier Set ---- 248
Solenoid Parts, Primer, Johnson/Evinrude ---- 95
Solenoids, Chrysler/Force ---- 44
Solenoids, I/O ---- 23
Solenoids, Johnson/Evinrude ---- 105
Solenoids, Mercury ---- 183
Solenoids, Yamaha ---- 243
Spanner Nut Tool, Lower Unit, Yamaha ---- 234
Spanner Nut, Lower Unit Yamaha ---- 234
Spark Plug Boots, Chrysler/Force ---- 44
Spark Plug Boots, Honda ---- 46
Spark Plug Boots, Johnson/Evinrude ---- 107
Spark Plug Boots, Mercury ---- 188
Spark Plug Boots, Nissan/Tohatsu ---- 193
Spark Plug Boots, Suzuki ---- 196
Spark Plug Gap Gauge ---- 247
Spark Plug Terminals, Chrysler/Force ---- 44
Spark Plug Terminals, Honda ---- 46
Spark Plug Terminals, Johnson/Evinrude ---- 107
Spark Plug Terminals, Mercury ---- 188
Spark Plug Terminals, Nissan/Tohatsu ---- 193
Spark Plug Terminals, Suzuki ---- 196
Spark Plug Wires, Chrysler/Force ---- 44
Spark Plug Wires, Honda ---- 46
Spark Plug Wires, Johnson/Evinrude ---- 107
Spark Plug Wires, Mercury ---- 188
Spark Plug Wires, Nissan/Tohatsu ---- 193
Spark Plug Wires, Suzuki ---- 196
Spring Puller ---- 248
Stands ---- 250
Starter Brush Kit, Mercury ---- 182
Starter Brush Loading Tool ---- 247
Starter Brush Loading Tool, Mercury ---- 182
Starter Brushes, Johnson/Evinrude ---- 105
Starters, Chrysler/Force ---- 42-43
Starters, Honda ---- 45
Starters, I/O ---- 23
Starters, Johnson/Evinrude ---- 100-104
Starters, Mercury ---- 177-182
Starters, Nissan/ Tohatsu ---- 193
Starters, Suzuki ---- 195
Starters, Yamaha ---- 242-243
Stators, Johnson/Evinrude ---- 108
Stators, Mercury ---- 189-190
Suzuki Drain Plug Gasket Kit ---- 198
Suzuki Fuel Filters ---- 194
Suzuki Fuel Pumps ---- 194
Suzuki Oil Filters ---- 194
Suzuki Pressure & Vacuum Tester Adapter ---- 197
Suzuki Spark Plug Boots ---- 196
Suzuki Spark Plug Terminals ---- 196
Suzuki Spark Plug Wires ---- 196
Suzuki Starters ---- 195
Suzuki Thermostats ---- 197
Suzuki Tilt Tube Parts ---- 198
Suzuki Trim Motors ---- 196
Suzuki Trim Relays ---- 197
Switch Boxes, Mercury ---- 189

T

Thermosensor, Yamaha ---- 246
Thermostats, Chrysler/Force ---- 40
Thermostats, Honda ---- 48
Thermostats, Johnson/Evinrude ---- 99
Thermostats, Mercury ---- 175
Thermostats, Nissan/Tohatsu ---- 192
Thermostats, Suzuki ---- 197
Thermostats, Yamaha ---- 241
Thread Chaser ---- 254
Thread Chaser Nut Tool ---- 254
Tilt Trim Relay, Johnson/Evinrude ---- 105
Tilt Tube Brush ---- 252
Tilt Tube Parts, Chrysler/Force ---- 40
Tilt Tube Parts, Johnson/Evinrude ---- 96
Tilt Tube Parts, Mercury ---- 168
Tilt Tube Parts, Nissan/Tohatsu ---- 192
Tilt Tube Parts, Suzuki ---- 198

PRECISION
Arizona • 1-800-977-1414
480-966-1550 • fax 480-966-1565
16441 N. 91St. Suite 105 Scottsdale, AZ 85260
Florida • 1-866-417-4072
941-238-0960 • fax 941-238-0965
1899 60th Place East, Bradenton, FL 34203
e-mail: info@wsmparts.com • www.wsmparts.com
VISA MasterCard AMERICAN EXPRESS DISCOVER NOVUS

INDEX

Tilt Tube Parts, Yamaha ---- 235-236
Tilt Tube Reamer ---- 252
Trim & Tilt Cylinder Wrench ---- 253
Trim Harness, Johnson/Evinrude ---- 107
Trim Harness, Nissan/Tohatsu ---- 193
Trim Motors, Chrysler/Force ---- 41
Trim Motors, Honda ---- 45
Trim Motors, I/O ---- 24-26
Trim Motors, Johnson/Evinrude ---- 106
Trim Motors, Mercury ---- 184-186
Trim Motors, Nissan/Tohatsu ---- 193
Trim Motors, Suzuki ---- 196
Trim Motors, Yamaha ---- 244-245
Trim Relay, Yamaha ---- 246
Trim Relays, Suzuki ---- 197
Trim Wrench, Universal ---- 253

U

Universal Flywheel Puller ---- 249
Universal Fuel Pump ---- 2
Universal Heat Shrink Assortment ---- 247
Universal Trim Wrench ---- 253
Universal Wire Terminal Kit ---- 247

V

Verado Flywheel Puller ---- 249
VST Fuel Filters ---- 13
VST O-Rings, Mercury ---- 165
VST O-Rings, Yamaha ---- 232

W

Water / Fuel Separators ---- 3-5
Water / Fuel Separators, Honda ---- 47
Water / Fuel Separators, Johnson/Evinrude ---- 95
Water / Fuel Separators, Yamaha ---- 233
Water Pump Housing Sleeve Kit, Mercury ---- 174
Water Pump Housing Sleeve Kit, Yamaha ---- 240
Water Pump Housing Sleeve, Mercury ---- 174
Water Pump Housing Sleeve, Yamaha ---- 240
Water Pump Housing Washer, Mercury ---- 174
Water Pump Housing Washer, Yamaha ---- 240
Water Pumps, I/O ---- 7
Wire Brush Set ---- 247
Wire Terminal Kit, Universal ---- 247

Y

Yamaha Bearings ---- 212-214
Yamaha Carburetor Kits ---- 227-230
Yamaha Connecting Rod Bolts ---- 211
Yamaha Connecting Rods ---- 211
Yamaha Crankshafts ---- 211
Yamaha Drain Plug Gasket Kit ---- 236
Yamaha Engine Rebuild Kits ---- 199-204
Yamaha Fuel Filters ---- 232
Yamaha Fuel Pumps ---- 231
Yamaha Fuel/Water Separators ---- 233
Yamaha Ignition Coils ---- 241
Yamaha Impeller Kits ---- 237-240
Yamaha Impellers ---- 237
Yamaha Lower Unit Individual Seals ---- 235
Yamaha Lower Unit Spanner Nut ---- 234
Yamaha Lower Unit Spanner Nut Tool ---- 234
Yamaha Oil Filters ---- 233
Yamaha Piston Kits ---- 205-210
Yamaha Power Head Gasket Kits ---- 215-226
Yamaha Rectifiers ---- 246
Yamaha Regulators ---- 246
Yamaha Solenoids ---- 243
Yamaha Starters ---- 242-243
Yamaha Thermosensor ---- 246
Yamaha Thermostats ---- 241
Yamaha Tilt Tube Parts ---- 235-236
Yamaha Trim Motors ---- 244-245
Yamaha Trim Relay ---- 246
Yamaha VST O-Rings ---- 232
Yamaha Water Pump Housing Sleeve ---- 240
Yamaha Water Pump Housing Sleeve Kit ---- 240
Yamaha Water Pump Housing Washer ---- 240

New York • 1-800-222-3375
631-244-8060 • fax 631-244-0556
61 Floyd Run, Bohemia, NY 11716

Puerto Rico
787-832-2499 • fax 787-832-2939
234 Balboa St., Mayaquez, Puerto Rico 00681-2605

e-mail: info@wsmparts.com • www.wsmparts.com

NOTES

PRECISION
Arizona • 1-800-977-1414
480-966-1550 • fax 480-966-1565
16441 N. 91St. Suite 105 Scottsdale, AZ 85260
Florida • 1-866-417-4072
941-238-0960 • fax 941-238-0965
1899 60th Place East, Bradenton, FL 34203
e-mail: info@wsmparts.com • www.wsmparts.com

WSM PERFORMANCE PARTS

PRECISION MARINE TOOLS

PROTORQUE PREMIUM MARINE ELECTRICAL PRODUCTS

Another WSM Catalog:

PERSONAL WATERCRAFT

Parts and Accessories